Finger Joint Boxes • Mail Organizer • End Table • Router Table Tips • Stackable Storage Racks

Woodsmith®

Vol. 19 / No. 110

Woodsmith

No. 110 April, 1997

Publisher Donald B. Peschke
Editor Terry J. Strohman
Associate Editor Jon Garbison
Assistant Editor Vincent Ancona
Art Director Todd Lambirth
Senior Illustrators David Kreyling, Dirk Ver Steeg
Graphic Designer Mike Mittermeier

CREATIVE RESOURCES
Creative Director: Ted Kralicek • *Project Developer:* Ken Munkel • *Project Designers:* Ted Wong Jr., Kevin C. Boyle • *Shop Man.:* Steve Curtis • *Shop Craftsman:* Steve Johnson • *Photography Dir.:* Lark Smothermon • *Senior Photographer:* Crayola England

BOOKS
Executive Editor: Douglas L. Hicks • *Art Director:* Linda Vermie • *Senior Graphic Designer:* Chris Glowacki

CIRCULATION
Circulation Director: Susan Du Bois • *Direct Mail Manager:* Glenda K. Battles • *Subscription Manager:* Sandy Baum • *Renewal Manager:* Paige Rogers • *Assistant Direct Mail Mgr.:* Julie Greenlee • *Assistant Subscription Mgr.:* Joy Krause • *Associate Graphic Design Director:* Susie Rider • *Sr. Graphic Designer:* Cheryl L. Simpson • *Promotion Copywriter:* Dave Stone

CORPORATE SERVICES
Vice President of Planning and Finance: Jon Macarthy • *Controller:* Robin Hutchinson • *Sr. Account.:* Laura Thomas • *Accts. Payable:* Mary J. Schultz • *Production Dir.:* George Chmielarz • *Production Assistant:* Susan Dickman • *Electronic Pub:* Douglas M. Lidster • *Production Artist:* Jon Snyder • *Pre-press Image Spec.:* Troy A. Clark • *New Media Manager:* Gordon C. Gaippe • *Network Administator:* Al Barnes • *Prof. Development Dir.:* Joyce Moore • *H.R. Assistant:* Kirsten Koele • *Admin. Assistant:* Julia Fish • *Receptionists:* Jeanne Johnson, Sheryl Ribbey • *Building Maint.:* Ken Griffith

WOODSMITH MAIL ORDER
Operations Director: Bob Baker • *Materials Mgr:* Mark Mattiussi • *Customer Service Mgr.:* Jennie Enos • *Nat. Sales Mgr:* Kent A. Buckton • *Warehouse Supr.:* Nancy Johnson • *Buyer:* Linda Jones • *Technical Service Rep.:* Matt TeRonde • *Oper. Assist.:* Tammy Aldini • *Team Leader:* Karla Eslinger • *Cust. Serv. Reps.:* Anna Cox, Margo Petrus, Tammy Truckenbrod, Billy Nelson, Nancy Downey, Jeffrey Lack • *Warehouse:* Chuck Carlson, Sylvia Carey, Larry Prine, Scott Gilliam,

WOODSMITH STORE
Manager: Dave Larson • *Assistant Manager:* Paul Schneider • *Sales Staff:* Pat Lowry, Jerome Herr, Wendell Stone, Jim Barnett • *Office Manager:* Vicki Edwards

Woodsmith® (ISSN 0164-4114) is published bimonthly (Feb., Apr., June, Aug., Oct., Dec.) by August Home Publishing Company, 2200 Grand, Des Moines, IA 50312.

Woodsmith® is a registered trademark of August Home Publishing.
Copyright© 1997 August Home Publishing Company. All rights reserved.

Subscriptions: Single copy: $4.99. One year subscription (6 issues), $24.95. (Canada/Foreign add $5 per year, U.S. funds.)
Periodicals Postage Paid at Des Moines, IA and at additional offices.
Postmaster: Send change of address to *Woodsmith*, Box 37112, Boone, IA 50037-2112.
Subscription Questions? Write to *Woodsmith*, P.O. Box 842, Des Moines IA 50304-9961 or call 1-800-333-5075, 8:00 am to 5:00 pm, Central Time, weekdays.
E-Mail: woodsmith@woodsmith.com
World Wide Web: http://www.woodsmith.com

Printed in U.S.A.

EDITOR'S COLUMN

SAWDUST

The other day I was rummaging through some old boxes in the basement of my parent's home. Anyway, as I worked my way down to the bottom of the last cardboard box, I came across a real "treasure."

Now this treasure really wasn't worth much (at least not in dollars). In fact, most people would have thrown it away a long time ago. So what was this great find? Well, it was my first woodworking project — an ordinary box.

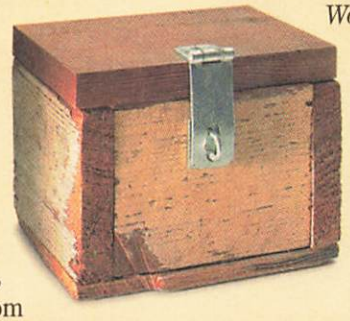

As you can see, it sure wasn't anything fancy — just five pieces of wood and a hinged lid. And since I was new to woodworking (I was about 12 years old), the joinery was far from being perfect.

Luckily, my joinery skills have improved somewhat over the years. But I still get a kick out of building boxes even though I've moved away from nails and butt joints. Now when I build a small box, I often use finger joints to hold it together.

FINGER JOINTS. Besides liking the clean, precise look of interlocking "fingers", there's something else about finger joints I enjoy. They're quick and easy to make.

In fact, cutting finger joints is so quick and easy I sometimes get carried away. In this issue we have three projects (a sliding lid box, a curved box, and a mail organizer) that use finger joints. Each has its own unique features. But all can be built in a short amount of time. And to help you build these projects, we've included a step-by-step article on making finger joint boxes. For more on this see page 14.

WORKBENCH

We've added another new face to our family of magazines here at August Home Publishing — *Workbench*.

As you probably already know, *Workbench* isn't really a new magazine. It has been around for some time. (It's celebrating its 40 year anniversary.) But with the change in ownership there's been some changes to the magazine as well.

The idea is to make *Workbench* the magazine for woodworking around the home, from framing decks, walls, and dormers to built-in cabinets and furniture. Along the way you'll also learn other skills needed to complete your projects, like laying tile and installing drywall, for example.

It sort of gives us the best of both worlds. *Woodsmith* will continue to offer detailed, step-by-step instructions for a variety of woodworking projects that you can build in your home shop.

At the same time, *Workbench* will explore a variety of ways for you to improve your home.

Terry

A LOOK INSIDE

CONTENTS

Features

Sliding Lid Boxes 6

You'll be surprised at how quick and easy it is to make these finger joint boxes. And the sliding lid design makes them functional as well as attractive.

Curved Box 8

All it takes are six small pieces of wood and a couple afternoons to construct this handsome box — which makes it a perfect gift item.

Mail Organizer 10

Finger joints aren't just for boxes. We also used them to join the ends and construct the drawer of this mail organizer.

Finger Joint Technique 14

A table saw, a simple jig, and our step-by-step technique allows you to turn out perfect-fitting finger joints every time — whether you're making one box or a dozen.

End Table 20

Here's a simple end table with two unique characteristics: diamond-shaped legs and a shelf made with slats.

Router Table Tips 28

Over the years, we've used a router table on many of our projects. And we've come across a lot of router table tips. Although it wasn't easy, we managed to pick our favorites.

Stacking Storage Racks 32

The neat, interlocking design of these racks allow them to be stacked in different configurations. And when you need to move them, just pick them up one-by-one, contents and all.

Departments

Tips & Techniques 4
Shop Notes 18
Talking Shop 26
Sources 35

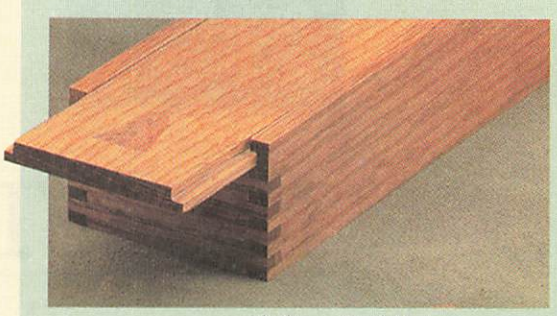

Sliding Lid Boxes page 6

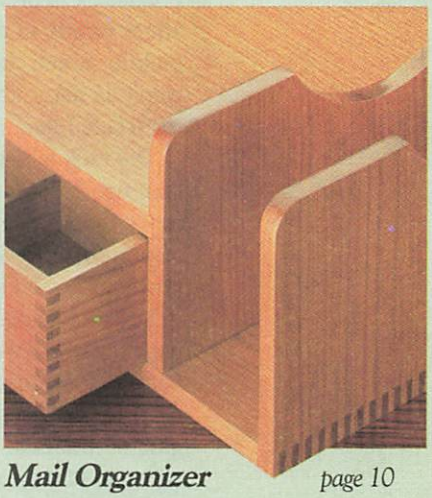

Mail Organizer page 10

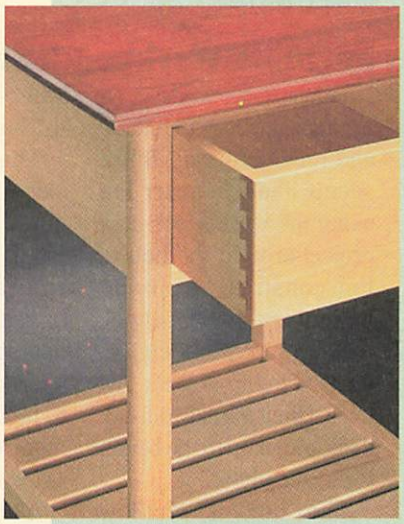

End Table page 20

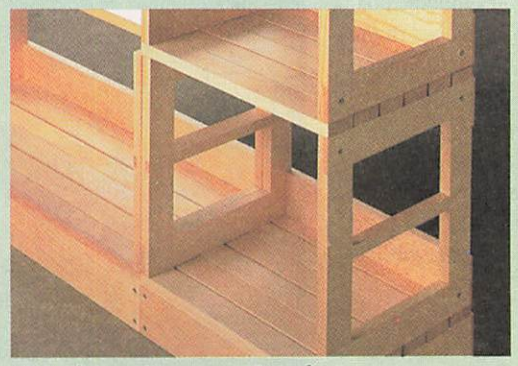

Stacking Storage Racks page 32

TIPS & TECHNIQUES

Pickup Plywood Rack

I haul a lot of plywood and sheet goods in my small pickup. Since the sheets won't lie flat in the bed of my truck, I made a rack.

The rack is made out of common 2x4's. It's nothing more than three runners attached to a couple of cross rails, see Fig. 1.

The rack is designed to clear the wheel wells of the truck. I positioned the rear cross rail just inside the tailgate so the rack wouldn't slide out of the truck.

To connect the runners to the cross rails, I used hex bolts, washers, and lock nuts, see detail 'a'.

The hex bolts and lock nuts fit into counterbored holes so they don't protrude above the surface of the rack. This way, you don't have to worry about damaging your stock (or your truck).

And by placing a washer between the runners and cross rails and leaving the lock nuts slightly loose, I'm able to fold up the rack when I'm not using it.

David Petersen
Austin, Texas

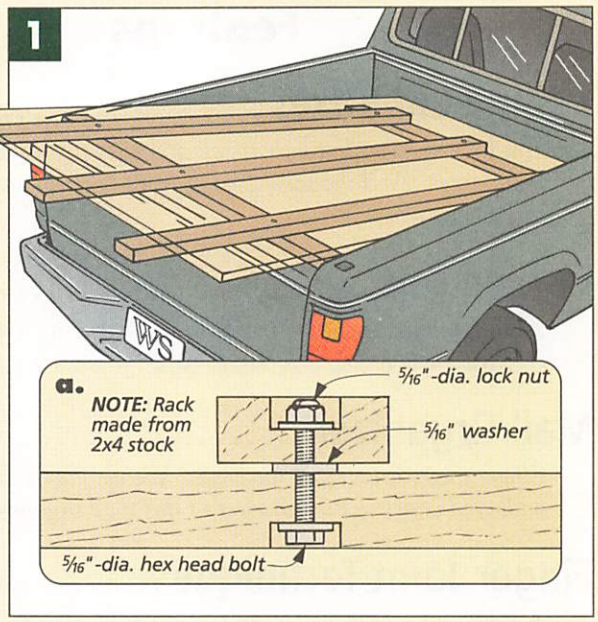

Portable Workbench Storage

I use a portable workbench because it's easy to fold up and move around. But it seems like whenever I'm using the workbench on a project around the house, I'm constantly running back to my shop for a tool.

So to provide a convenient place to store a few tools, I built a small tool box that's mounted to the bench itself, see photo.

The box is shallow enough so the bench can still be folded up without the box getting in the way.

The front, back, and sides of the box are made out of 1/2"-thick stock, see Fig. 1. The ends of the front and back are rabbetted to hold the sides. Then I also cut rabbets on the top and bottom edges of each piece to hold a top and a bottom made out of 1/4" hardboard (Masonite).

After cutting the top and bottom panels to size, I glued up the box. Then I cut the box in two to create a lid. To fasten the lid to the box, I used ordinary butt hinges. And I also added a catch to the front of the box.

Finally, I screwed the box to a hardboard tray that's attached to the workbench. Now wherever I take the bench, I have my basic tools right at hand.

Warren Weber
Canon City, Colorado

A shallow box attached to the bottom of a portable workbench provides a handy place to store some of the tools you'll need on the jobsite.

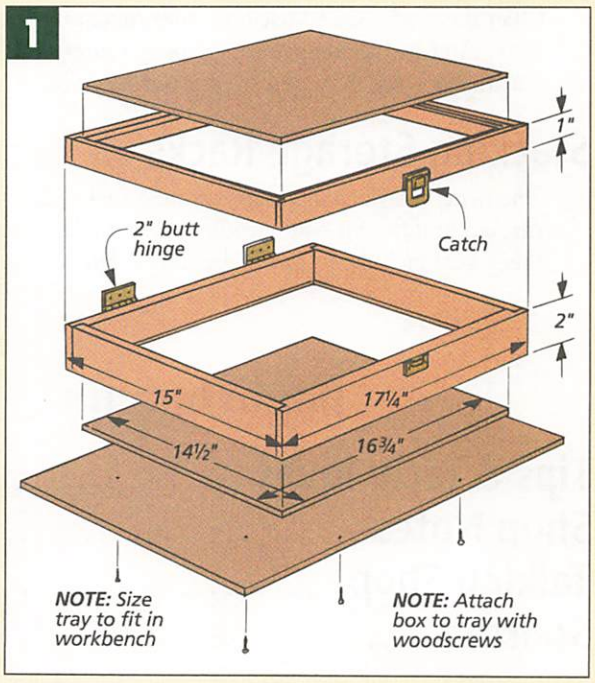

Drill Press Accessory Bar

I like to keep a few small clamps near my drill press for attaching fences or stop blocks. But the trouble is finding a place to store them where they are handy, yet out of the way.

To solve this problem, I made a storage rack that attaches to the column of my drill press, see photo.

The rack is nothing more than a piece of angle iron. And to attach it to the column, I drilled a couple of holes for a muffler clamp, see Fig. 1.

(Muffler clamps can be purchased at auto parts stores. You'll need one that's large enough to fit around the support column of your drill press.)

After attaching the rack, I made a tray out of ½"-thick stock and ¼" hardboard, see Fig. 2. By bolting the tray to the angle iron, I also have a place to keep drill bits.

Ron Hale
Joshua Tree, California

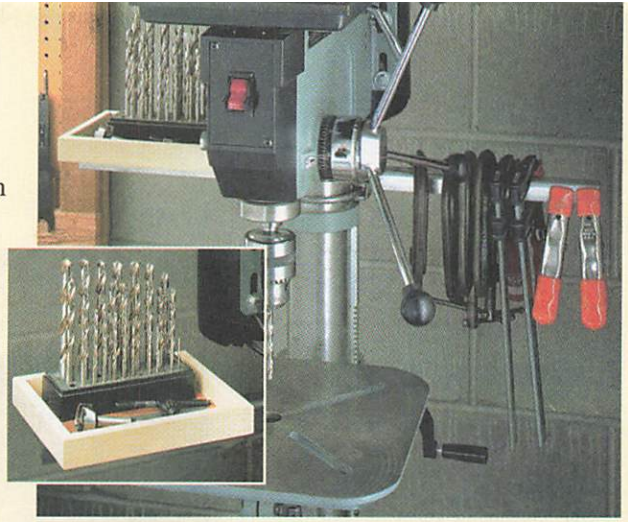

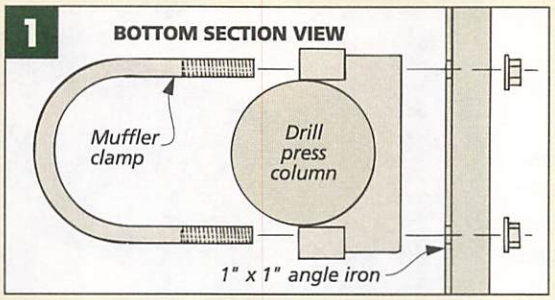

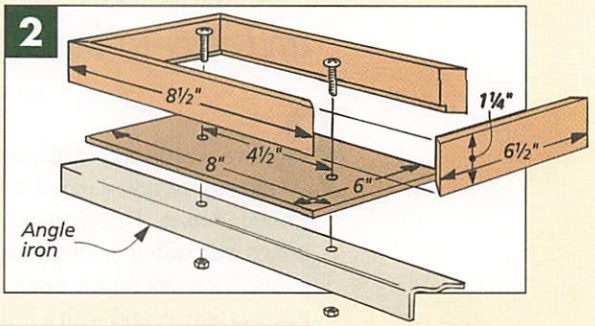

Band Clamp Corner Protection

Band clamps are a great way to glue up small mitered boxes. But the trouble I have is that the metal corners that come with the clamps often leave dents in the wood.

To get around this problem, I make my own corner protector pads out of corrugated cardboard, see drawing. The cardboard is heavy enough to protect the corners. Yet it won't leave any marks behind on your project.

Tom Morrison
Newark, New York

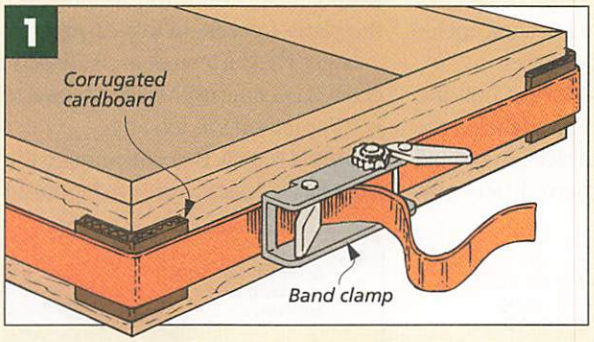

QUICK TIPS

PAINTING SCREWHEADS

On occasion, I need to paint the screwheads of a project before assembling it. Trying to hold the screws while painting them is messy and difficult.

So instead, I stick all the screws into a scrap piece of foam insulation (blue board). Then I can easily paint the screwheads and let them dry without touching them.

John Pierce
Carlsbad, California

ADHESIVE REMOVER

I use pressure sensitive adhesive (PSA) sanding discs on my disc sander. But sometimes when I peel off the sandpaper, adhesive sticks to the metal disc.

To remove the adhesive, I use something I always have around my shop — WD-40. Just spray the WD-40 on the disc, let it soak in for a minute, and wipe the adhesive off.

Bob Kelland
St.John's, NF, Canada

SUBMIT YOUR TIPS

If you would like to share an *original* shop-tested tip, send it to: *Woodsmith*, Tips and Techniques, 2200 Grand Avenue, Des Moines, Iowa 50312. Or if it's easier, FAX it to us at: 515-282-6741. Or use our E-Mail: woodsmith@woodsmith.com

If published, you'll receive $30 to $150, depending on the published length. Include a brief explanation and sketch or photo. And don't worry, we'll rewrite the tip and redraw the art, if necessary. Also, *please* include a daytime phone number.

Sandpaper Bag

During the summer, I find sandpaper curls up in my basement shop because of the humidity. To prevent this, I now store my sandpaper in large-size resealable plastic bags. And the write-on label area provides a handy place to identify the grit of paper in the bag.

Erich Lage
West Des Moines, Iowa

SLIDING LID BOXES

Finger joint boxes aren't all that common anymore. But they're still attractive, strong, and easy-to-build.

Before plastic and cardboard, people stored and carried things in wooden boxes. The smaller of these boxes were often joined with finger joints. It's a quick joint that's easy to mass produce, and with a little glue, it's quite strong.

I use finger joints for the same reason. I can build a box quickly with a table saw and a simple jig. In fact, I can build a lot of boxes quickly, as you can see in the photo at right.

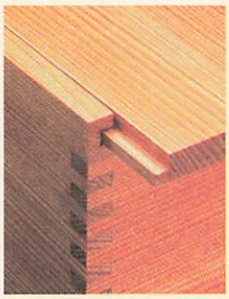

▲ *The lid on this box slides into shallow grooves cut in the sides and back.*

LID. The other thing I like about these boxes are the lids. They're irresistible. As soon as you pick up a box, you just have to slide it open and shut.

Because the lid fits inside rather than on top of the box, the fingers are cut a little different than explained in the article on page 14. Basically, you just cut fewer fingers on the front corners, see photo in margin.

Note: The step-by-step drawings here feature the short pine box in the photo above. Overall dimensions for the other boxes in the photo are included in the box on the next page.

SIDES & ENDS. These boxes start out as 1/4"-thick **front, back (A)**, and **sides (B)**, cut about 1/8" oversize in width. Then the finger joints can be cut, and the box can be assembled as shown in the article on page 14 — except for a few important differences.

FRONT ENDS. When laying out and marking the pieces, I also labeled the front end of each side piece so I would remember to cut them differently. The fingers on these pieces aren't cut all the way to the top edge, see photo in margin and detail 'a' below.

What I do is start with the back end of these pieces and count the number of passes I make over the blade (thirteen for the box shown below). Then when cutting the front end, I simply make two fewer passes over the blade (eleven, in this case).

Note: The thirteen slots on the back end will become twelve after the waste is trimmed off the top edge.

GROOVE FOR LID. Before trimming the front piece, I cut the groove for the lid

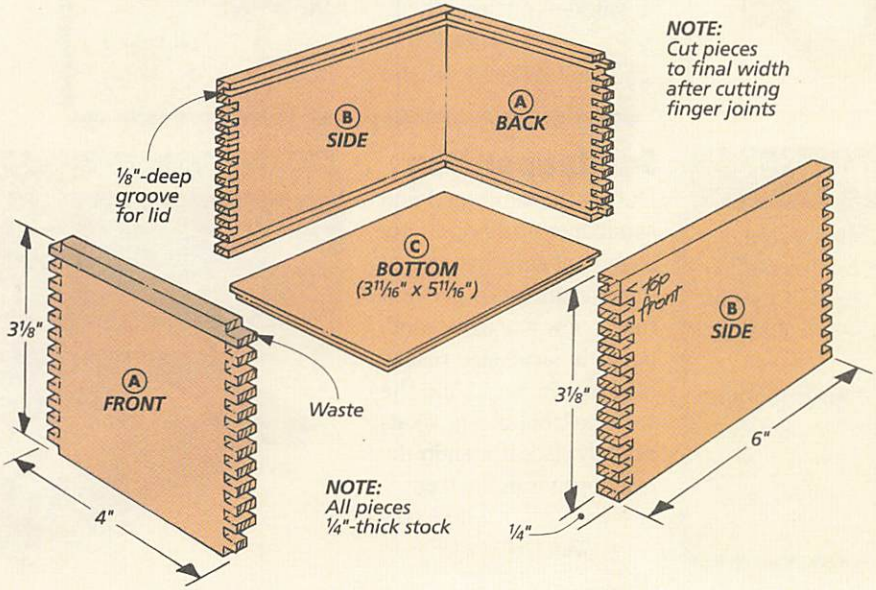

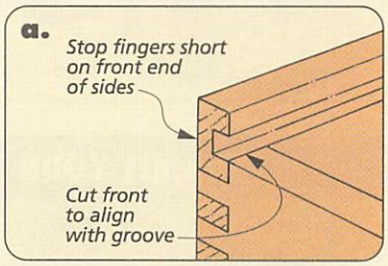

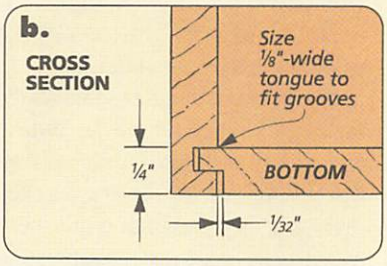

on the top inside face of the back and side pieces. This groove is identical to the one for the bottom (1/8" x 1/8").

TRIM FRONT PIECE. After the grooves for the lid were cut, I raised the blade and trimmed off the top edge of the front piece. This way, it lines up with the bottom of the groove perfectly, see detail 'a' on page 6.

Now, a 1/4"-thick hardwood **bottom (C)** can be added, and the box can be glued together, refer to page 14.

LID. With the box assembled, work can begin on the **lid (D)**, see Fig. 1. The lid is nearly identical to the bottom of the box. But it's 3/16" longer so it ends up flush with the front of the box. And instead of cutting a 1/8"-wide rabbet along all four edges, the lid only has three edges rabbeted.

I sized the tongues created by these rabbets so they would just fit into the grooves in the box. Then I sanded the tongues on the sides of the lid so it would slide in and out easily. But leave the back edge tight so it'll hold the lid in place.

FINGER PULL. At this point, the lid will fit into the box, so next I added a small recess so I could pull it out easily with the tip of a finger, see Fig. 2.

Figuring out just how to cut a clean pull took some experimenting. But I found a quick and easy method using a drill press, a 1"-dia. Forstner bit, and an angled scrap block, see Fig. 2.

First, I laid out the position of the pull, see Fig. 2b. Then to prevent chipout, I scored the pull's straight edge 1/2" from the front of the lid.

Now to support the lid, I trimmed one end of a scrap piece of 2x4 at 8° so it would hold the lid at a slight angle, see Figs. 2 and 2a. Next, position the lid so the drill bit starts cutting at the "point" of the pull. Then lower the bit to the scored line.

PLUG GROOVES. All that's left now is to plug the holes left by the grooves at the top and bottom of the box. But take special care with the plugs at the top, see Figs. 3 and 3a. If they extend too far into the groove, they could prevent the lid from closing. For more on making these plugs, see page 19.

Finally, with the plugs glued in and trimmed flush, I sanded the box smooth and wiped-on an oil finish. W

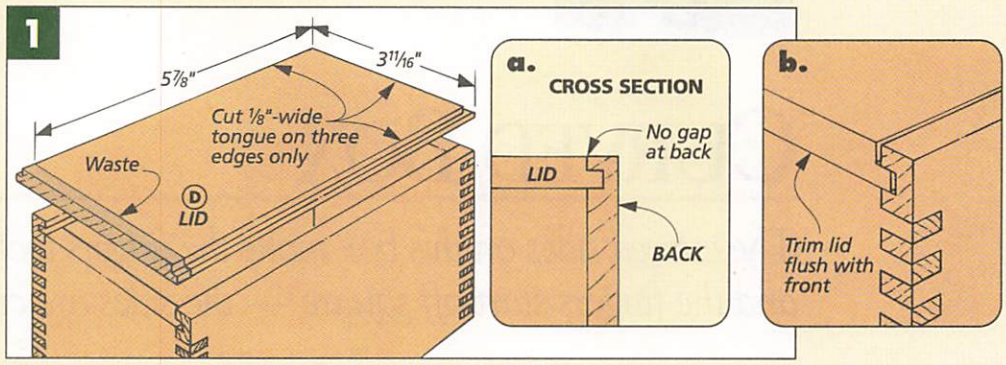

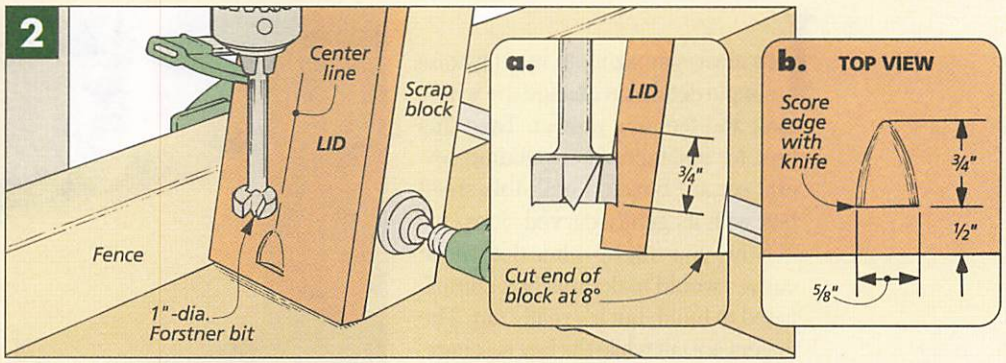

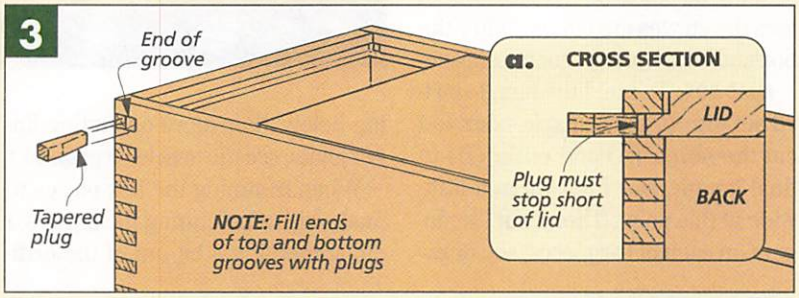

ALTERNATE BOX SIZES

I like these boxes because I can turn out two or three in no time at all. In fact, I found myself trying different woods and changing the size of the boxes, see photo above left and the drawing at right.

One note of caution, though. Since the stock is only 1/4" thick, don't make your boxes much wider than 5". Otherwise, the lid will more than likely cup.

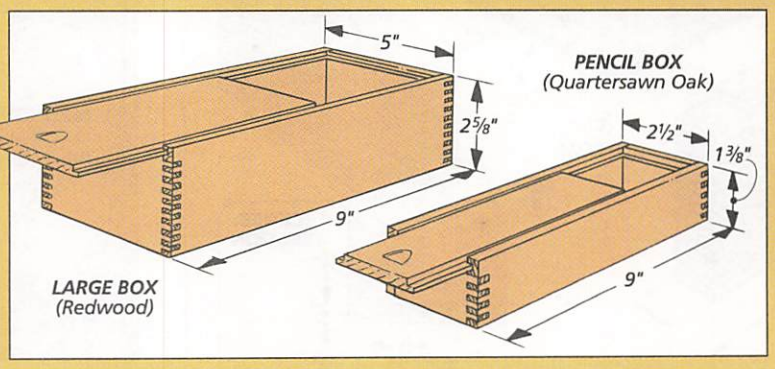

CURVED BOX

The curved sides on this box make the fingers look curved too. But the box and the fingers start off square — the sides are curved after it's assembled.

It's always amazing to me how one simple detail can change the whole look and feel of a project. Take this box, for instance. After building several square boxes, I built this small box with its gently curved sides.

Now, you might think that these curves would make this box complicated to build, but it's really not. The fingers are cut while the box is square. And the lid starts out square, too. In fact, the curves are cut only after the box and lid are pretty much complete.

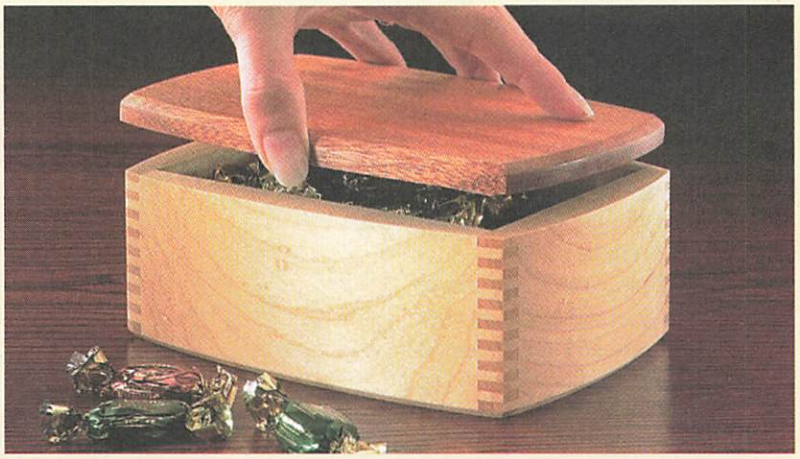

BUILD BOX. To build the box, I started out with ¾"-thick maple stock and cut the **sides (A)** and **ends (B)** to final length. But I left them a little wide at this point. Then I cut the fingers on each of the pieces, see drawing below. (For more on cutting finger joints, see the article on page 14.)

When trimming the box pieces to final width after cutting the fingers, I did something a bit out of the ordinary for finger joints. I trimmed the side pieces so there's a finger at the bottom but a slot at the top, see drawing. And the end pieces are just the opposite; there's a slot at the bottom

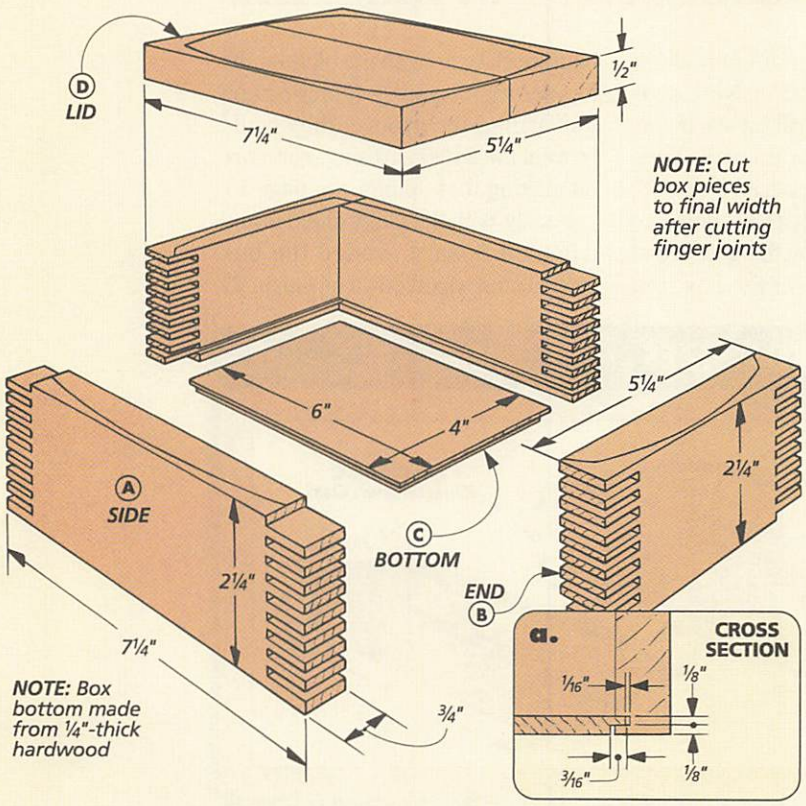

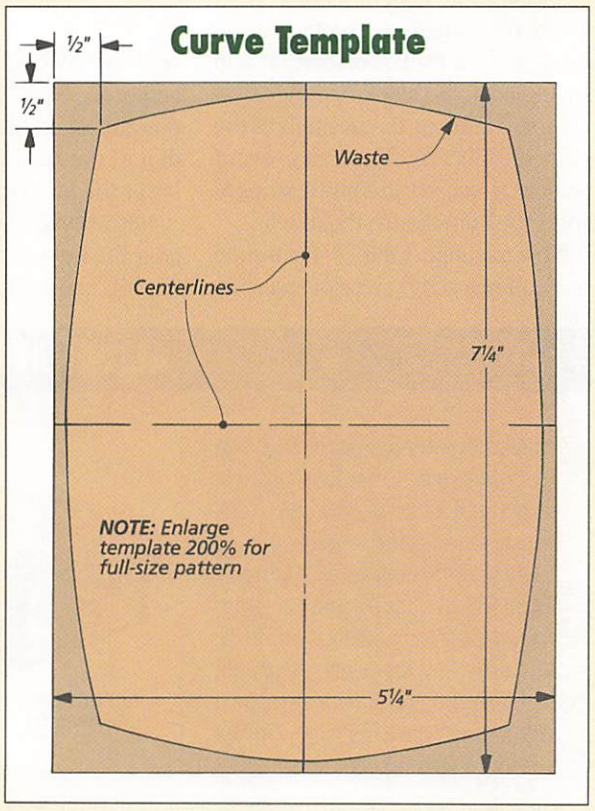

and a finger at the top. This allows for the finger-sized chamfers that are routed later along the bottom edge.

Now, grooves can be cut in the box pieces, and a 1/4"-thick hardwood **bottom (C)** can be cut to size and rabbeted to fit the grooves, see detail 'a' on page 8 and the article on page 14.

ADD LID. After the box is assembled, work can begin on the **lid (D)**, see drawing on page 8. Since it matches the size of the box (5 1/4" x 7 1/4"), I could have cut the lid from a single board, but I decided to glue up two pieces of 1/2"-thick mahogany to reduce the chance of cupping.

After the lid blank is cut to final size, I rabbeted its bottom edges so it would fit into the box, see Fig. 1. This rabbet should match the thickness of the box sides (3/4"). But don't try to cut them exactly to size the first time. It's better to sneak up on the final width of the rabbet so you end up with a tight fit, see Fig. 1a.

CUT CURVES. When the lid fits the box, it's time to cut the curves. I used double-sided carpet tape to hold the lid to the box so I could cut them both at the same time, see Fig. 2. But don't use too much carpet tape here, or it'll be hard to remove the lid later.

To lay out the curves, I simply laid out three points (one at the center and two more 1/2" in from the outside corners), see template at left. Then I connected them, drawing the gentle curve freehand. But you could also photocopy the template at 200% and trace around it, see Fig. 3.

With the curves drawn on the lid, they can be roughed out on the band saw, see Fig. 4. There's no trick here; just stay about 1/16" outside each line.

PLUG GROOVES & SAND. Now while the box and lid are still rough, I plugged the exposed grooves and trimmed the plugs flush. Then I clamped the box in the vise and hand sanded everything smooth, see Fig. 5. (The box and lid should still be taped together at this point.)

ROUT CHAMFERS. The last step is to rout a chamfer around the box and lid, see Figs. 6 and 6a.

The idea here is to align the chamfer bit with the first finger at the bottom of the box, see Fig. 6a. So I routed the chamfer around the bottom edges of the box first, starting with the ends and then chamfering the sides. Then rout an identical chamfer around the top edges of the lid.

Now the lid can be removed from the box, and a couple coats of a wipe-on finish can be applied.

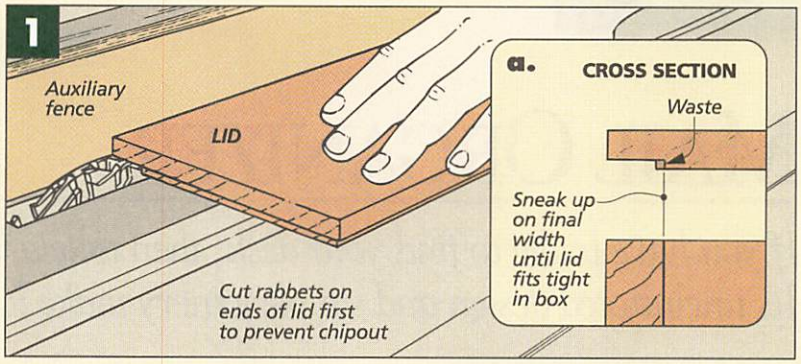

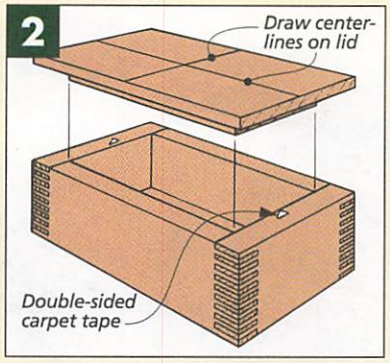

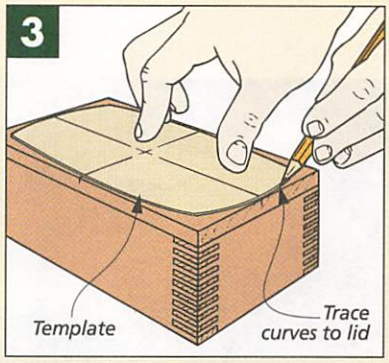

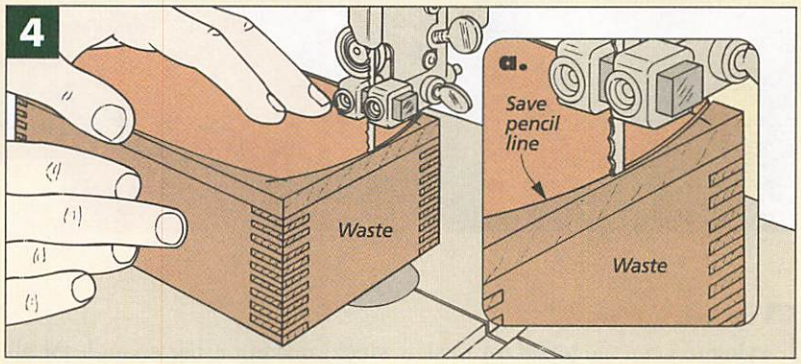

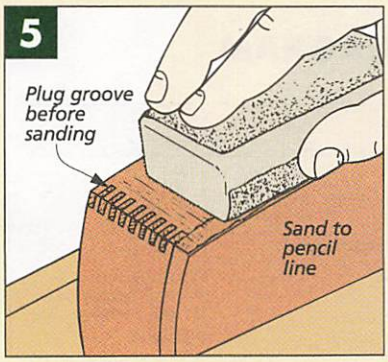

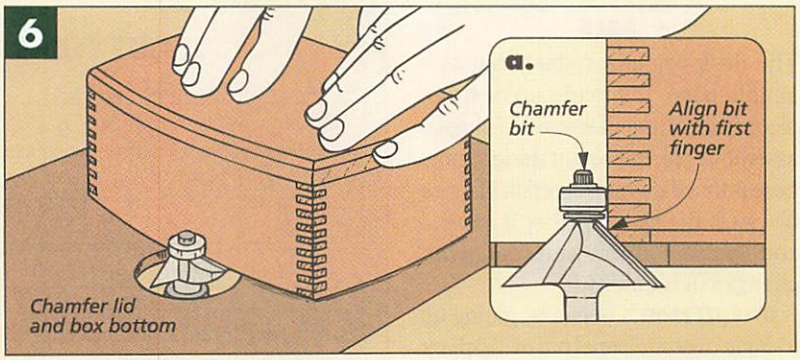

FEATURE PROJECT

MAIL ORGANIZER

If you have to dig to find your desk, then take a look at this organizer. Its uncluttered design and simple joinery make it a great project to build.

Trying to keep the top of my desk clean is like trying to keep dust off my workbench. Junk mail, memos, magazines, and catalogs seem to settle all too quickly, and before I know it, there's more paper than desk.

So recently, I designed this mail organizer. It has a slot on each side for incoming and outgoing mail. In between these slots, there's a drawer for pens, stamps, and envelopes. And above that, a wide tray for magazines.

BASE

The desk organizer starts out as a simple base. It's made up of three pieces joined together into a U-shaped assembly. The important thing to note here is that the grain direction of these pieces is the same so they'll expand and contract at the same rate with changes in humidity.

OVERSIZE PANEL. I began by gluing up a single oversize panel out of 3/8"-thick stock, making it big enough for all three base pieces. (Mine was roughly 9 3/4" x 28".) Note: You may want to start with 1/2"-thick stock and plane it down to 3/8" after gluing up the panels. (For sources of 1/4" and 3/8"-thick stock, see page 35.)

At this point, you can cut the **bot-**

MATERIALS & SUPPLIES

A	Bottom (1)	3/8 x 9 5/8 - 18	**G**	Dwr. Sides (1)	1/4 x 2 1/8 - 9 1/8
B	Ends (2)	3/8 x 9 5/8 - 4 3/8	**H**	Dwr. Btm. (1)	1/4 ply. - 8 7/8 x 11 3/4
C	Shelf (1)	3/8 x 9 1/4 - 12 1/4	**I**	Tray Fr./Bk (2)	1/8 x 1 - 11 1/2
D	Dividers (2)	3/8 x 9 5/8 - 4	**J**	Tray Dividers. (3)	1/8 x 1 - 2 3/4
E	Back (1)	3/8 x 3 1/2 - 12	•	(6) #8 x 1" Fh Woodscrews	
F	Dwr. Fr./Bk.(2)	1/4 x 2 1/8 - 12	•	(4) 3/4"-dia. Felt Pads	

CUTTING DIAGRAM

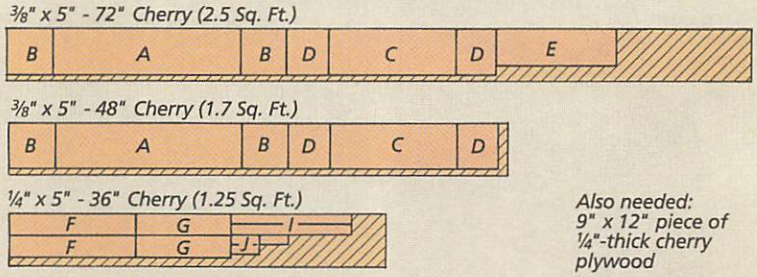

Also needed: 9" x 12" piece of 1/4"-thick cherry plywood

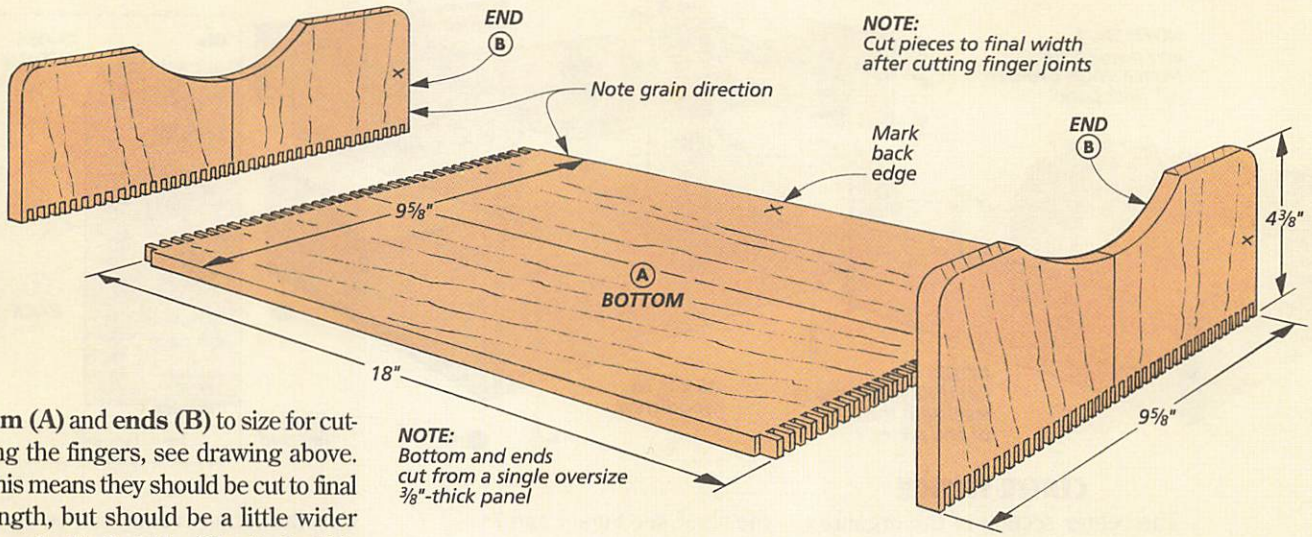

tom (A) and **ends (B)** to size for cutting the fingers, see drawing above. This means they should be cut to final length, but should be a little wider than the final width. (The final width of my base pieces was 9⅝").

CUT FINGER JOINTS. Now the finger joints can be cut on the bottom and end pieces, refer to page 14. I started with the end pieces. But when cutting the first slot on the bottom piece, I found it necessary to clamp the end piece to the finger joint jig, see Fig. 1. This way, I had two hands free to hold the bottom piece.

After the finger joints are cut, the pieces can be trimmed to final width, see Fig. 2. But before you can glue the base together, there's some work to do on the end pieces.

SHAPE ENDS. The first thing I did was to shape the top edges of the end pieces. I wanted to remove the sharp corners and create a cut out so it would be easy to get at the letters.

First, draw a ½"-radius roundover at each top corner. Then lay out a 2½"-radius arc centered on the top edge of each end piece, see Fig. 3. To strike this larger arc, I used a compass, locating the center on a scrap piece that was butted to the end piece.

The next step is to rough out the shape of the ends with a band saw (though a sabre saw would also work), see Fig. 4. Then they can be sanded smooth, see Fig. 5.

ASSEMBLE BASE. Now the base can be assembled, see Fig. 6. But keeping a U-shaped assembly square requires a little help. The easiest way to keep the end pieces square is to cut a couple scrap blocks to fit between them while the base is being assembled.

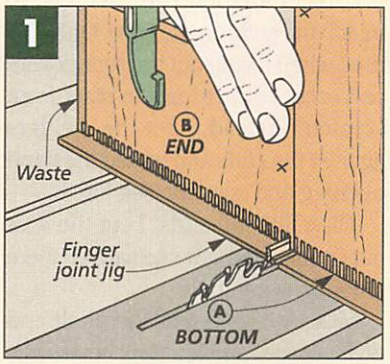

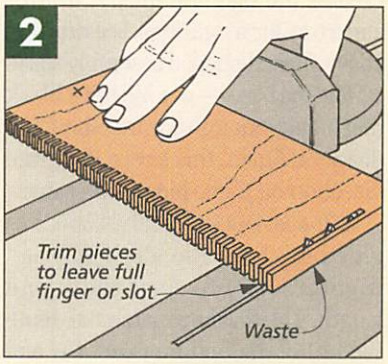

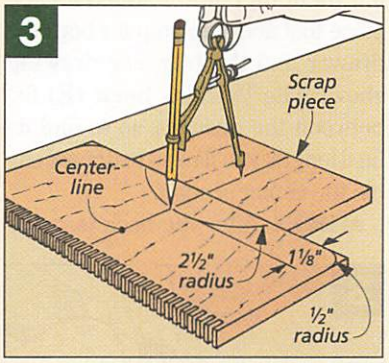

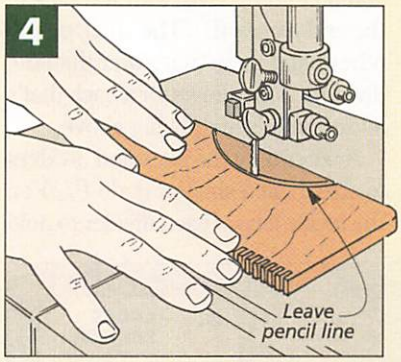

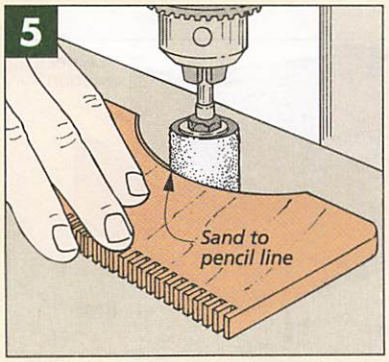

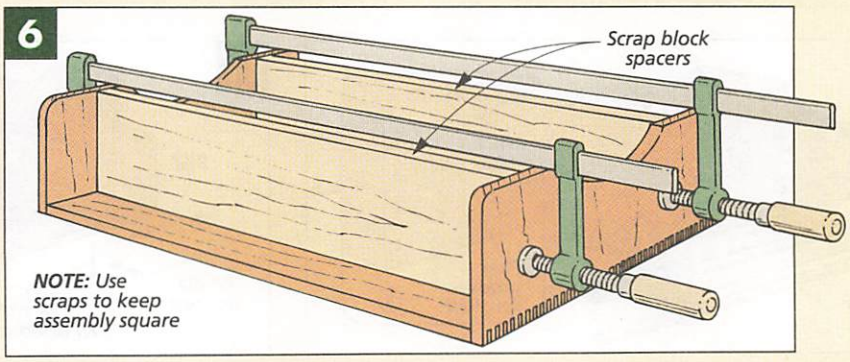

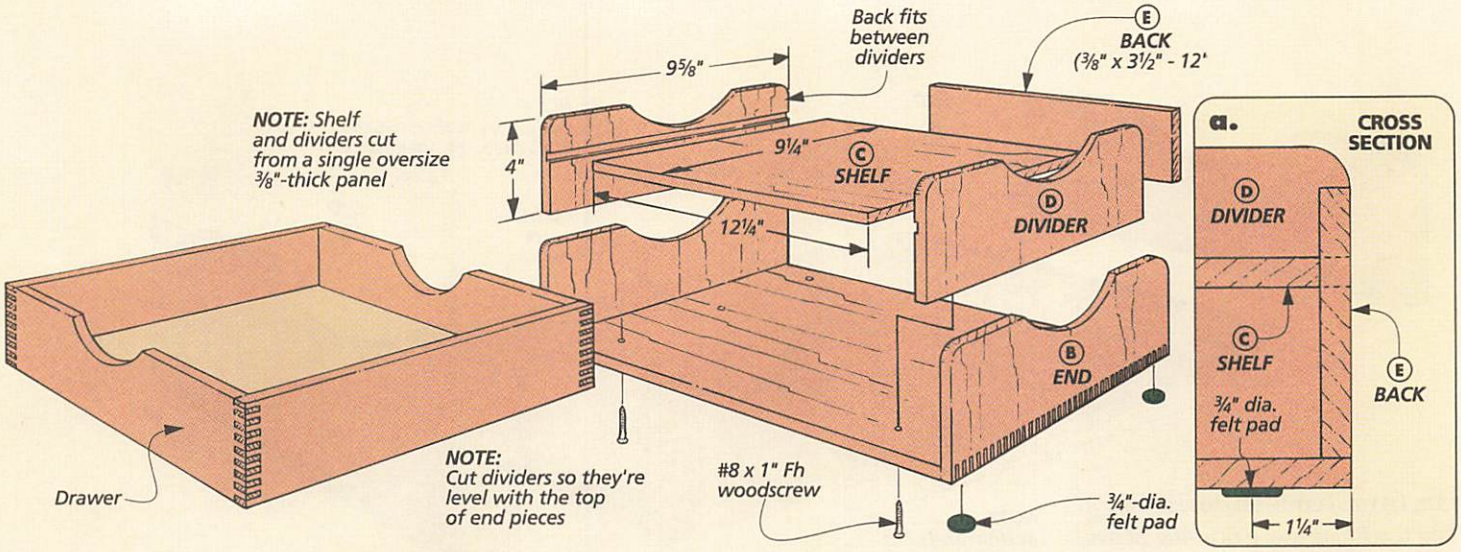

CENTER SECTION

The center section of the organizer creates the opening for the drawer and a tray for magazines, see drawing above. This H-shaped assembly starts off like the base — as a 3/8"-thick blank that's long enough for the shelf and dividers. Again, this keeps the grain direction on these pieces the same.

SHELF & DIVIDERS. Once the blank was glued up, I cut the **shelf (C)** and **dividers (D)** to final width and length. The dividers match the depth (width) of the bottom panel (A) and should end up level with the tops of the end pieces (B). The shelf, on the other hand, is 3/8" narrower than the dividers. This allows for a back that's added later, see drawing above.

After cutting the shelf and dividers to size, I cut a shallow dado (1/8") on the inside face of each divider to hold the shelf, see Figs. 7 and 7a.

Next, I shaped the dividers to match the ends on the base. Only this time when laying out the roundovers and arcs, I didn't have to start from scratch. Instead, I set the dividers against the ends and traced the hand opening and corners, see Fig. 8.

Then like the ends, I cut the arcs out on the band saw and sanded them smooth, see Fig. 9.

BACK. At this point, the shelf and dividers are complete. But before gluing them together, I added a back piece that acts as a stop for both the drawer and the tray, see drawing above. The 3/8"-thick **back (E)** fits between the dividers, so to find its final length, you'll need to dry assemble the center section.

ASSEMBLY. After the back is cut to size, the center section can be glued together. But like the base, this assembly needs a little support to keep it square. The back piece keeps the dividers square at the back. But to keep the front square while clamping, I added a scrap piece that's cut the same length as the back, see Fig. 10.

PLUGS. At this point, the grooves are exposed at the back. So before adding the center section to the base, I decided to plug these grooves in case the organizer is ever set on top of a desk with its back exposed, see Fig. 10a.

To do this, I ripped an 1/8"-wide strip off of some 3/8"-thick scrap I had and then sanded the scrap until it fit into the groove. Then it's glued in place and trimmed flush.

ATTACH TO BASE. Now the center section can be attached to the base. To

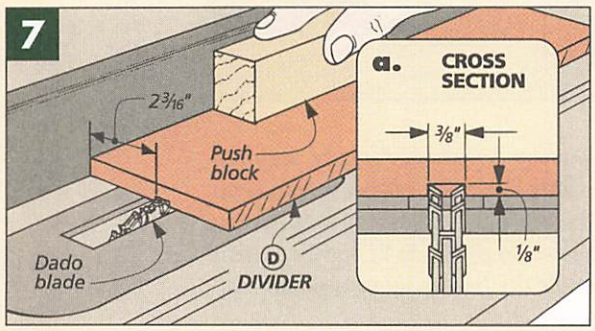

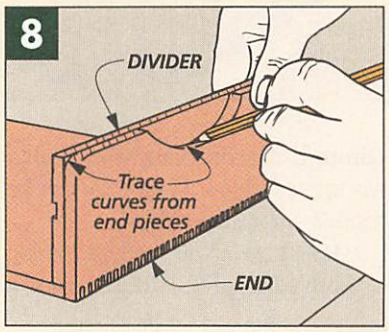

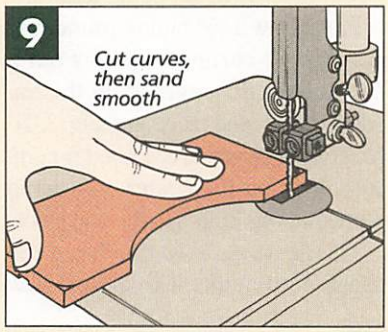

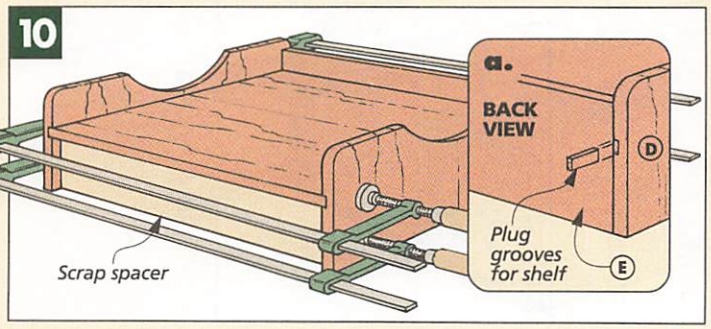

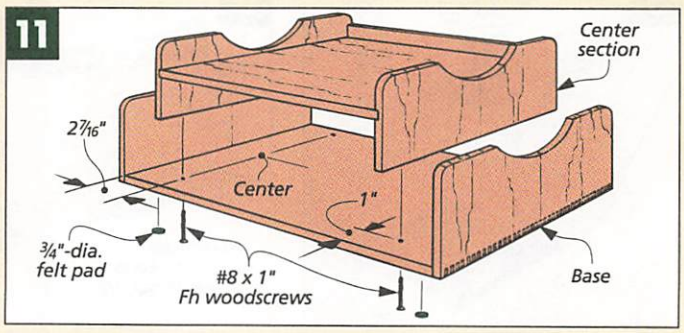

do this, simply clamp and screw them together, see Fig. 11. Then finally to protect the bottom corners of the organizer, I added felt pads, see the drawing and detail 'a' on page 12.

DRAWER

With the main part of the organizer complete, I began work on the drawer, see drawing at right.

CUT TO SIZE. When cutting the 1/4"-thick **drawer front** and **back (F)** to size, I made them the same length and width as the drawer opening. And when determining the length of the **sides (G)**, I sized them so the drawer would set back 1/8" from the front of the organizer.

Then after the finger joints and the groove for the bottom are cut (see the article on page 14), I cut a 1/4"-thick plywood **bottom (H)** to size and rabbeted the edges to leave a 1/8" tongue to fit the grooves, see detail 'a'.

CUT ARCS. Before assembling the drawer, arcs need to be laid out and cut on the front and back pieces, see detail 'b' above. (The arc on the front acts as a drawer pull, and the back one allows the drawer to close easier.)

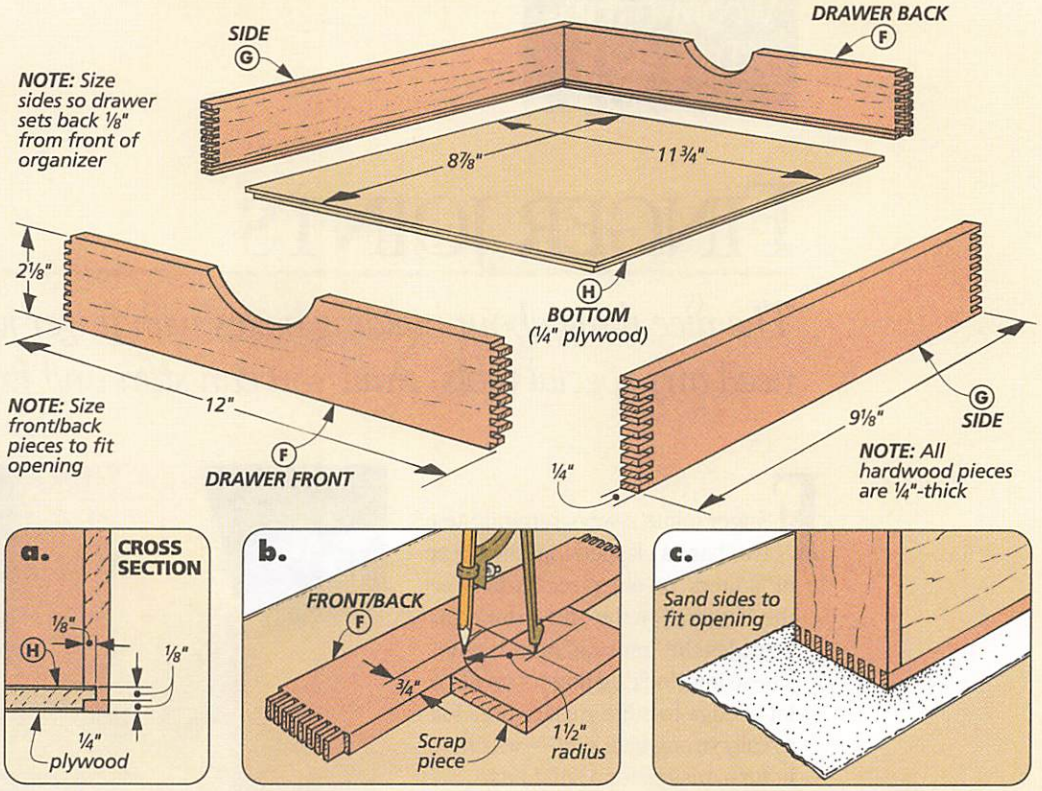

FINAL FITTING. With the drawer glued up, sand (or plane) the top and bottom edges equally until the drawer fits its opening with a 1/16" gap along the top.

Next, I sanded the sides until the drawer slid in and out smoothly, see detail 'c' above. Note: To avoid rounding over the drawer's corners, I placed adhesive-backed sandpaper on a flat surface to sand the sides.

PENCIL TRAY. Finally, to create a compartment for pens, stamps, and other supplies, I added a pencil tray inside the drawer, see box below. W

HALF-LAP PENCIL TRAY

To keep the inside of the drawer as organized as the top of my desk, I added a small pencil tray, see Fig. 1.

The tray was built from 1/8"-thick stock and included a **front, back (I)** and three **dividers (J)**, see Fig. 1. I cut the front and back pieces to fit inside the drawer tight. (You can sand the ends of the tray after assembly, if necessary.) And as for the height of all the tray pieces, I made sure they all ended up below the arc on the drawer front. (Mine were 1" tall.)

To cut the half laps, I used the miter gauge with an auxiliary fence. And for the half laps on the ends, I used the rip fence with an auxiliary fence as a stop, see Fig. 2.

The only trick with half laps is to make sure the blade height equals half the height of the workpieces. Also, I used a rip blade, since it cuts flat-bottomed half laps.

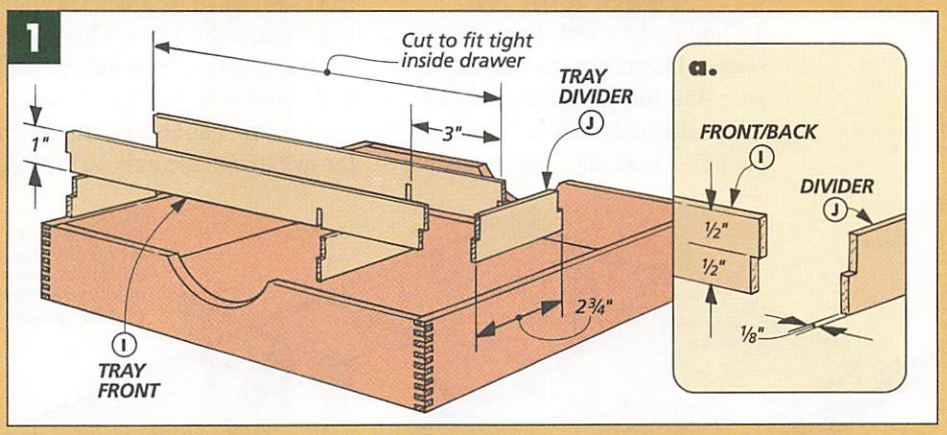

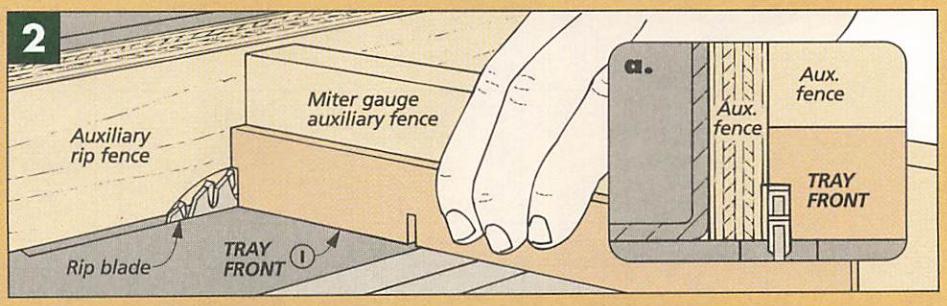

FINGER JOINTS

The nice thing about building boxes with finger joints is that you don't need any special tools. And you can start and finish a box in a day.

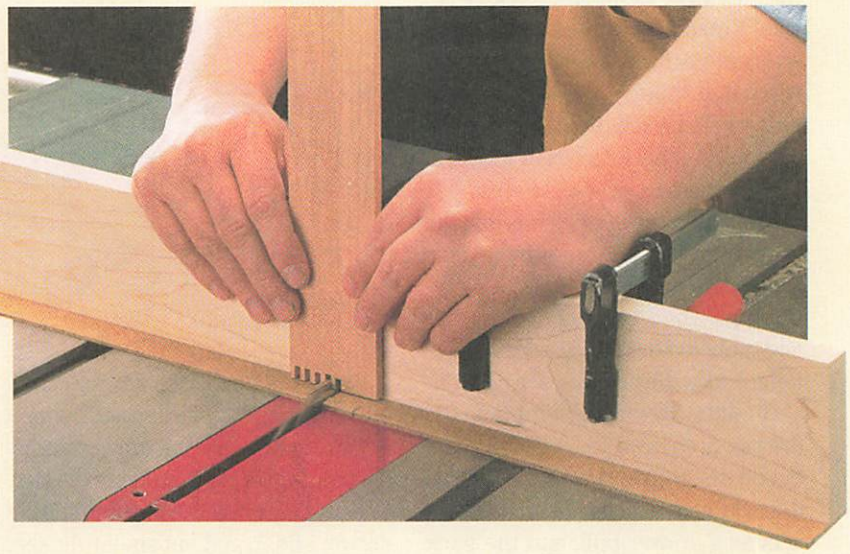

Finger joints always remind me of two hands clasped together. A set of "fingers" on one piece fits between the "fingers" on the other. But what provides the "muscle" here is glue. These interlocking fingers create a lot of edge-to-edge surface area for a really strong glue joint — which, in turn, makes for a solid box.

And while cutting all those tiny fingers might seem tedious, it's really a snap. All you need is a jig that you can build in about fifteen minutes with a few shop scraps.

Plus, you don't need a shop full of tools. To make the fingers, I use a table saw with a miter gauge and a rip blade (or any other blade that cuts a flat-bottomed kerf, see page 19).

FINGER JOINT JIG

To build a box with finger joints, a series of kerfs are cut with the table saw. And the pieces are supported and positioned with the help of a simple jig — basically, just an auxiliary fence with a key to index the fingers.

FENCE & LEDGE. My auxiliary fence is a piece of stock temporarily clamped to the miter gauge, see drawing below. But I also add a 1/4"-thick hardboard ledge under this fence. This way, the workpiece doesn't ride directly on the table (and over the blade insert that may not be flat and level). Instead, the piece rests securely on the ledge.

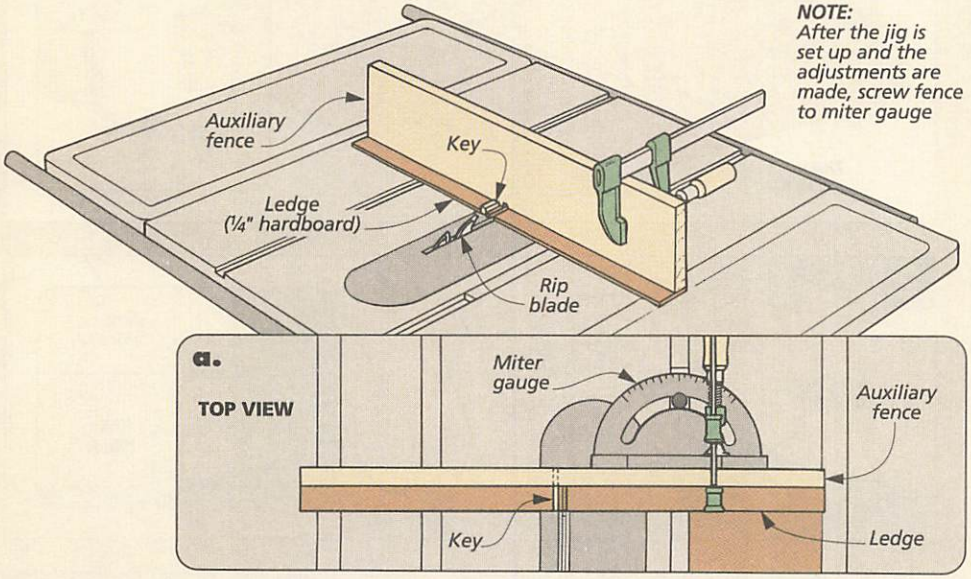

NOTE: After the jig is set up and the adjustments are made, screw fence to miter gauge

KEY. While the fence and ledge support the workpiece, a small key added to the fence is really what makes the jig work. It's cut to match the width of the kerf left by your saw blade. And this key is positioned so the distance between it and the blade is identical to the width of the key, itself.

To add the key, first I clamped the fence to the miter gauge and cut a notch in it, see Step 1 above right. Then I cut the key from a scrap piece to fit tight into this notch, see Step 2. A tight fit here is critical — you don't want any "play" when fitting the kerfs of the workpiece over the key.

SETTING UP THE JIG. With the key glued in place, the jig is built, but it's not set up. There are two things to do: position the key by adjusting the fence on the miter gauge and raise the blade to the right height, see box at right.

ADJUSTING THE FENCE. When setting up the fence, the distance of the key from the blade has to match the thickness of the blade (and the key). Otherwise, the fit of the fingers will either be too tight or loose, see box.

I start by positioning the key with

a second, identical key, see Step 3. Then I check the setup by cutting a series of finger joints on two test pieces, see Step 4.

But I don't just use any scraps that happen to be lying around. Instead, I make my test pieces identical to my final pieces in width and thickness (but not necessarily length). I even use the same type of wood. This way, I can use these test pieces later when plugging the holes left by the grooves for the bottom.

Using a second key to set the first will get you close. But you'll probably still need to "tweak" the fence one way or the other, see box and tip in margin at right. It's important to be patient; it will probably take several adjustments (and test cuts) before the fit is perfect.

I like to end up with a snug fit so that when dry assembling the pieces, I have to work the pieces a bit to press the fingers together and pull them apart. But this way, I can usually avoid using clamps when gluing the boxes together. But more on that later.

SETTING THE BLADE. After the key is set and the fence has been screwed to the miter gauge, I set the height of the saw blade. Of course, when you're done, you want the fingers perfectly flush with the mating pieces. But here, when setting the blade, I let the fingers protrude *just slightly*—less that 1/64". (I'll sand them flush later.)

To set the blade height, I position the workpiece next to the blade. But I start with the blade slightly *below* the height of the workpiece and sneak up on the final height as I test the fit, see box below. This way, the auxiliary fence will back up the cut completely, and there will be less chance for chipout when cutting the fingers.

FINGER JOINT JIG: STEP-BY-STEP

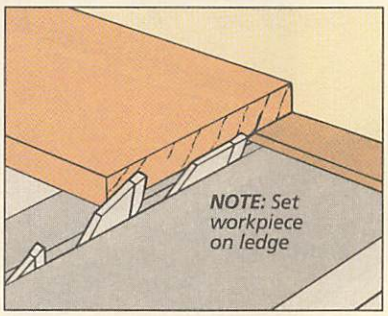

1 *After setting the blade slightly below the thickness of the stock, cut a notch in the fence (and ledge).*

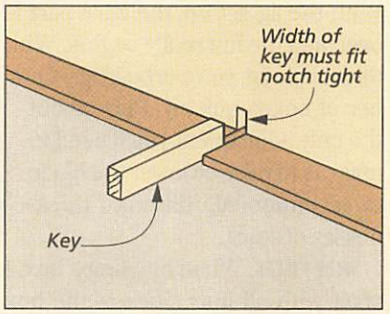

2 *Next, size a key that will fit tight in the notch that was just cut in the fence. Then glue it in place.*

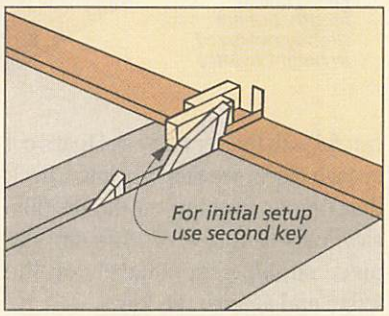

3 *Now using a spacer the same size as the key, move the fence so the spacer fits between the key and blade.*

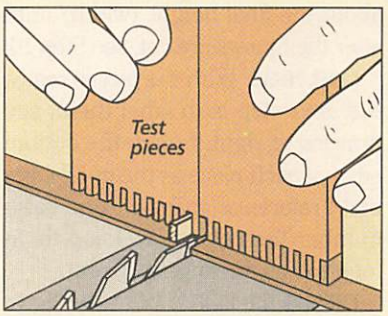

4 *Test the setup and make needed adjustments to fence and blade. Then screw fence to miter gauge.*

▲ *When setting up a finger joint jig, I make any micro-adjustments "visible" by drawing a line across the jig and table.*

FINE ADJUSTMENTS

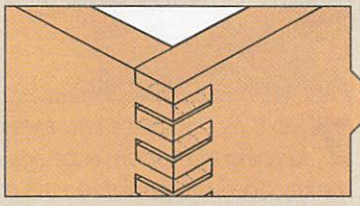

Loose fit. *If there's a gap between each finger, simply slide the key and fence away from the blade.*

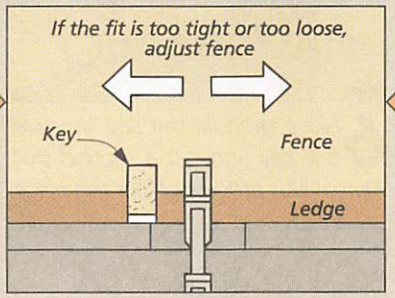

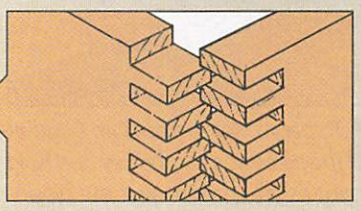

Tight fit. *If the fingers won't fit into the slots at all, then slide the key and fence towards the blade.*

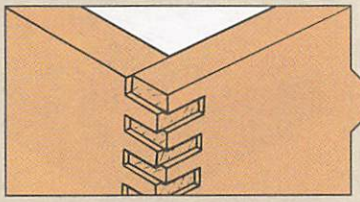

Short fingers. *If the blade is set too low, the fingers will be short, so raise the saw blade slightly.*

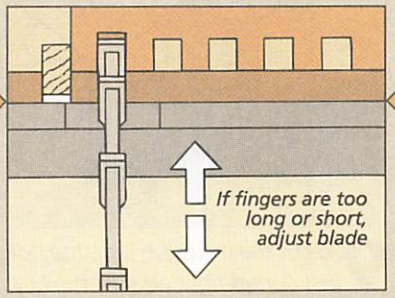

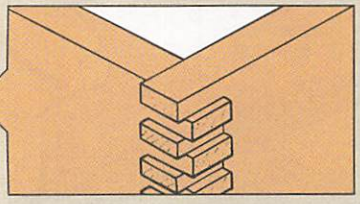

Long fingers. *If the fingers extend too far, the saw blade is too high and needs to be lowered.*

BUILDING THE BOX

With the jig set up, the hard part is over, and the fun really begins. With this simple jig, you can build any number of boxes quickly. Plus, about the only adjustment you'll need to make is to raise or lower the blade to accommodate different thicknesses of stock.

WIDE PIECES. When building a box, I start with all four sides of the box planed to finished thickness and cut to final length. But I leave them slightly oversized in width. I don't worry about the final height (width) until after the fingers are cut, see Step 10.

LABEL PIECES. With the pieces ready, the next step is to label them, see drawing at right. I mark the bottom edge of each piece as the good edge that I reference my cuts from. I also number the corners to keep them together as the fingers are cut.

CUTTING THE JOINTS. With the jig to guide you, cutting finger joints is just about automatic. But you do need to keep some things in mind.

I found that it's good to be extra careful with the very first slot that's cut in each piece, see Step 5 below. Check that there's nothing on the jig (like sawdust) to throw off this cut; the piece should rest squarely on the ledge and against the key.

Then when cutting the rest of the fingers and slots, you need to be as consistent as possible, see Steps 6-9. Even shifting the pressure slightly can affect the final fit of the corner. So I hold the piece against the jig with both hands and try to make each pass exactly the same.

CHIPOUT. I should also mention something about chipout. Chipout can be a problem any time you cut finger joints, but two things will help. First, make sure your blade is sharp. And second, make sure the notch in

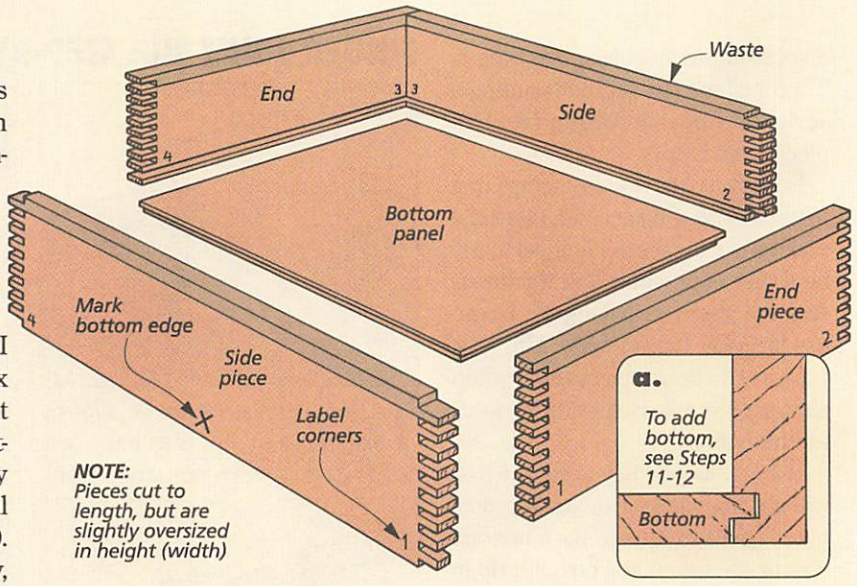

FINGER JOINTS: STEP-BY-STEP

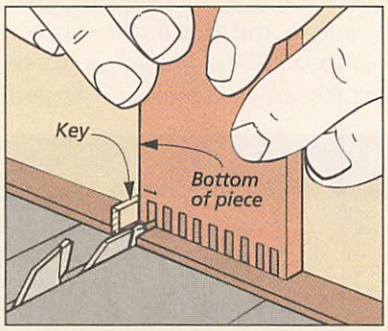

5 *To begin, set the bottom edge of the piece against the key and hold it tight as you pass it over the blade.*

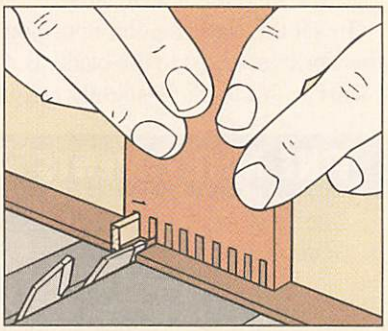

6 *Now, straddle the first slot over the key and cut a second slot. Repeat this process across the piece.*

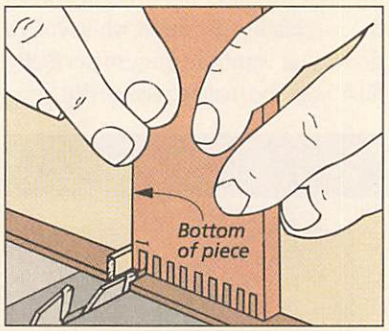

7 *Next, flip the piece end-for-end, keeping the bottom edge against the key. Then cut the slots on this end.*

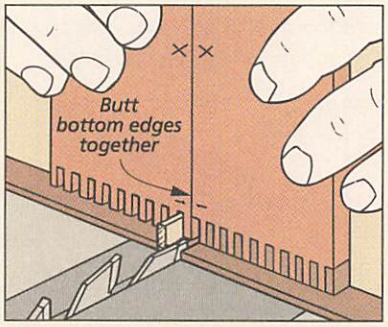

8 *Now, rotate the piece so the first slot straddles the key. Set the mating piece in place and cut its first slot.*

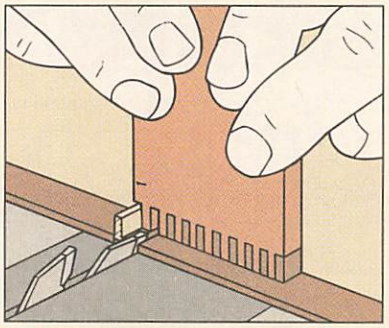

9 *To cut the next slot, slide the slot just cut up tight against the key. Then continue as before.*

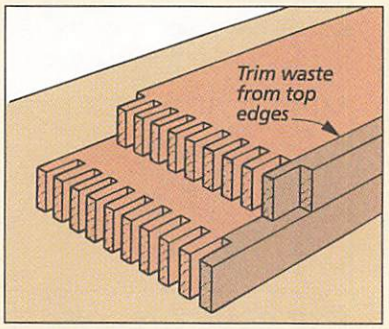

10 *After all four corners are complete, trim the top edge of each piece to leave a full finger or slot.*

your jig matches the height of the slots you're cutting. This way, the workpiece is backed up completely.

FINAL HEIGHT. After the fingers are cut, I trim the top edge of the pieces so there's a full finger (and slot) left, see Step 10. Because my blade is a hair over 1/8"-thick, I usually find this dimension ends up a little more than the one I'm shooting for, but for most boxes, the final height is not critical.

Of course, there are times when the finished height can't be ignored. Take the mail organizer on page 10. It's drawer has to fit a specific opening. But I still make the pieces oversize and then trim them from both the top and bottom so the fingers here are identical.

BOTTOM PANEL. The next step is to add the bottom panel, see Steps 11 and 12. To cut the grooves for this panel, I use the same saw blade and set the rip fence with a side piece, refer to drawing on page 16 and Step 11 below. Set the bottom edge against the fence and align the blade with the first finger. Then double check the setup with the end piece.

ASSEMBLY. When the bottom is cut and rabbeted to fit the grooves (Step 12), I dry assemble the box. Then when satisfied with the fit, it's time to glue it together, see Steps 13-16.

GLUE. Dry assembling a box can be done at a leisurely pace, but when it's time to apply the glue, there's no time to dawdle. You have to get glue in all the fingers and get the joints together before the glue sets up.

To help, I apply glue to the ends of the pieces, see margin photo below right. And I use a slow setting glue, like white glue or liquid hide glue. Of the two, I prefer hide glue because it cleans up well with water and if any glue is left on the inside corners, it doesn't stand out much after an oil finish is applied.

And speaking of glue on the inside corners, I scrape it out and wipe off as much as possible with a damp rag before it sets up. It's just too hard to remove after it's dried.

SEATING THE JOINT. Once the glue is applied, I drive the fingers into the slots with one of the test pieces that I used earlier to set up of the finger joint jig, see Step 13. Often once the joint is seated, there's enough friction to hold the corner together, so I don't even have to use any clamps.

ADDING CLAMPS. However, once in a while, I'll have a cupped piece that needs to be clamped, see Step 14. In this case, I apply the clamps just inside the fingers and add a small spacer in the middle to keep the sides of the box from bowing in.

PLUGS. When the glue is dry, there are still a couple "clean-up" steps. First, I plug the holes left by the grooves for the box bottom, see Step 15. (For a quick way to make plugs, see page 19.) Then I trim them and sand the sides of the box smooth.

FLATTEN BOTTOM. Finally, you may notice the corners of the bottom of the box aren't perfectly flush. But this is an easy fix. Just attach sandpaper to a flat surface and sand the bottom of the box lightly, see Step 16. W

ASSEMBLING THE BOX: STEP-BY-STEP

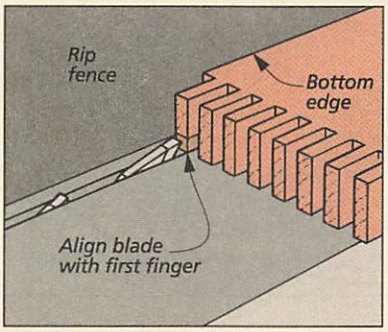

11 *Next, to hold a bottom panel, cut a groove on each piece, using a workpiece to set the fence.*

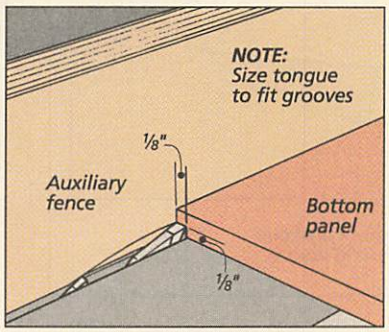

12 *With the bottom panel cut to size, rabbet its bottom edges to create a tongue to fit the grooves.*

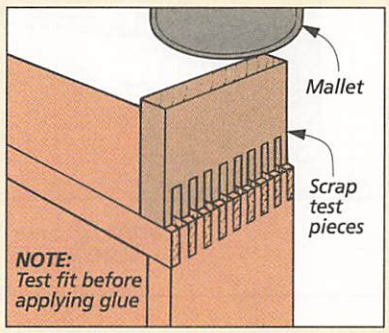

13 *To seat the joints after applying glue (see margin), use a mallet and one of the test pieces.*

▲ *To assemble a finger joint quickly, I run the glue across the ends of the fingers.*

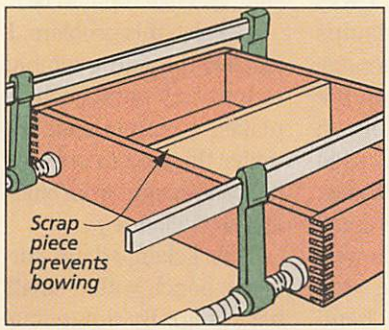

14 *Apply clamps to the corners, if necessary. A spacer will keep the sides from bowing in.*

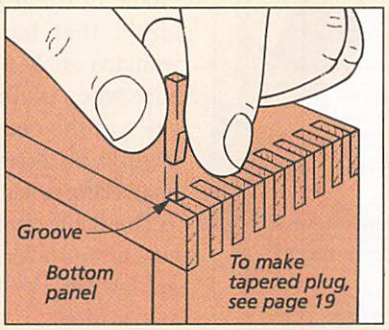

15 *With the glue dry, plug the exposed grooves at the bottom of the box and trim them flush.*

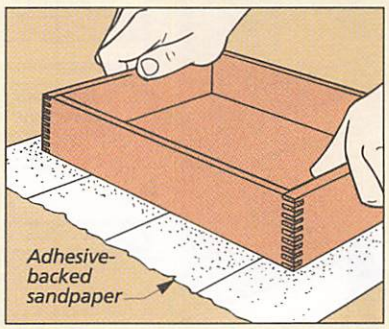

16 *If necessary, apply adhesive-backed sandpaper to a flat surface and sand the bottom flat.*

SHOP NOTES

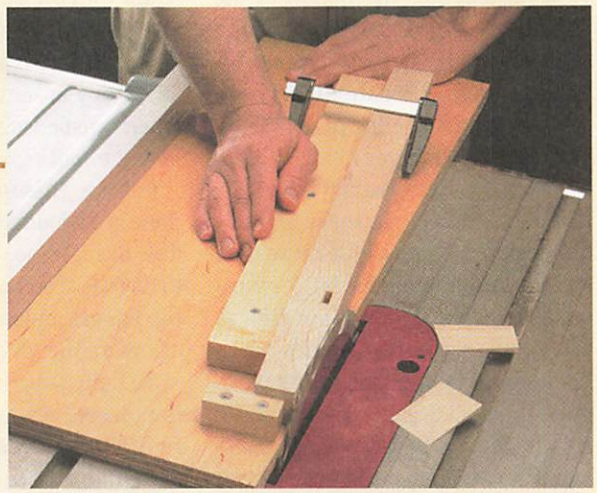

Taper Jig

There are a lot of different ways to cut a taper. But for the legs on the end table, we decided to use a table saw and a shop-made jig.

The jig is nothing more than a "sled" which the leg rides on as it's pushed past the saw blade. To construct the jig, start by making a base out of 3/4" plywood. I made mine about 10" wide and 30" long, see Fig. 1.

A couple cleats screwed to the base of the jig hold the leg at the proper angle for cutting the tapers, see drawing. This ensures that all the tapers will be the same length.

To position the cleats, I laid out the tapers on one of the legs, extending the lines down the side and end of the leg. Then I set the leg on the base of the jig so the layout lines aligned with the edge, see Fig 2.

Now just trace the outline of the leg onto the base. Now all you have to do is set the cleats along these lines and screw them down to the jig base.

To use the jig, I set the rip fence to match the width of the jig base. Then I clamped the leg against the jig cleat, see photo. (Be sure to keep the clamp out of the path of the blade.)

Instead of pushing the jig all the way past the blade, I stopped as soon as the taper was cut. Then I turned off the saw, pulled the jig back, and rotated the leg to cut the second taper.

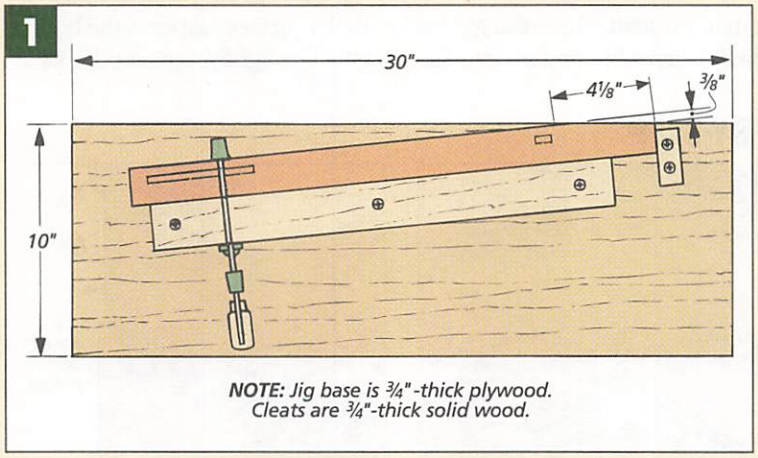

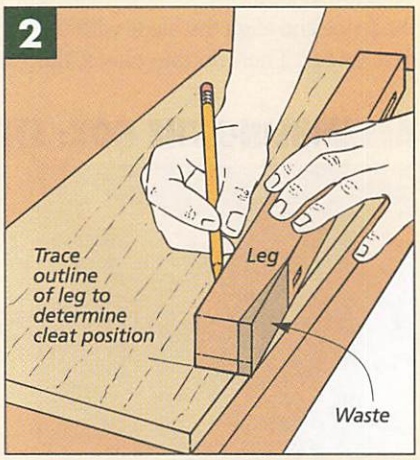

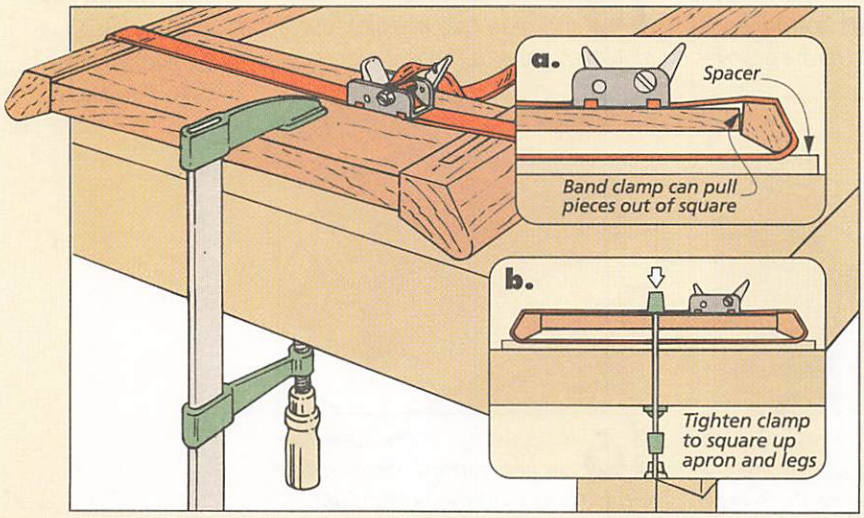

Clamping Rounded Stock

Because of the rounded shape of the legs, I was afraid that bar clamps wouldn't apply even pressure when gluing up the sides of the end table on page 20. So instead, I used band clamps, see drawing.

The band clamps created a new problem, however. On one of the side assemblies, the band clamps caused the legs to flex outward, see detail 'a'. Consequently, my mortise and tenon joints weren't as snug as I like them to be.

To solve this problem, I just laid the side assembly on top of my workbench. (I placed a couple spacers under the side to prevent the band clamps from binding, see detail 'a'.)

Then I clamped the side to my bench with a small bar clamp. By tightening the clamp down, I was able to pull the legs back into square, see detail 'b'.

Cutting Bevels

Usually, there's not much to ripping a bevel. Just tilt the blade and run the workpiece through the saw.

But when it comes to ripping the bevels on the legs of the end table featured in this issue, there are a few pointers that make the job a little easier and safer.

To start with, make sure you set up your rip fence so the blade tilts away from the fence. (Depending upon your saw, this may mean moving the fence to the left side of the blade.) Otherwise, the waste can get trapped between the fence and the blade, and a kickback could occur.

I also used a featherboard to help hold the legs tight against the fence. And because they are so narrow, I used a push stick to guide each leg through the saw.

Ripping the first bevel is relatively easy, since there is a nice flat surface on which to rest the push stick, see Fig. 1.

When it comes to the second bevel, however, it's a little more difficult to control the leg with a conventional push stick. The push stick has a tendency to slide down the bevel that is already cut. So here I use a different approach.

To maintain a better grip on the workpiece when cutting the second bevel, I used a different kind of push stick, see Fig. 2. It's kind of like the sticks used to pick up litter.

It's just a hardwood dowel with a wire brad nailed into one end. Then I snipped off the head of the brad, leaving about a 1/4" projecting from the end of the dowel.

By actually pushing the brad into the leg, I don't have to worry about the push stick slipping off the surface of my workpiece.

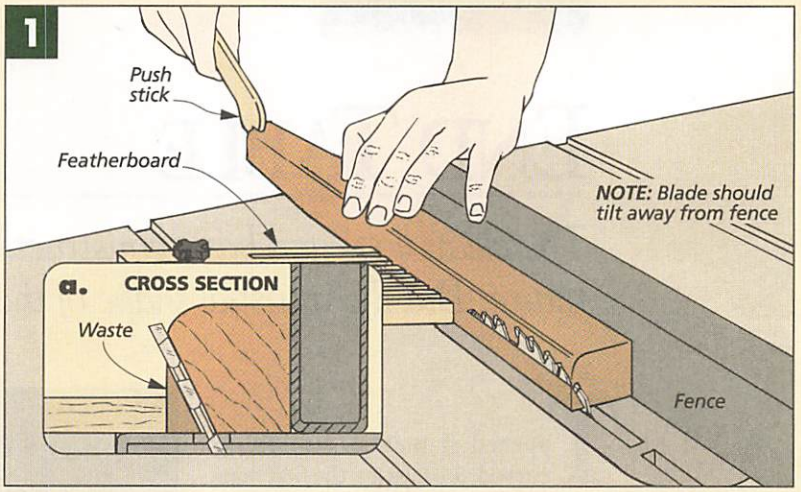

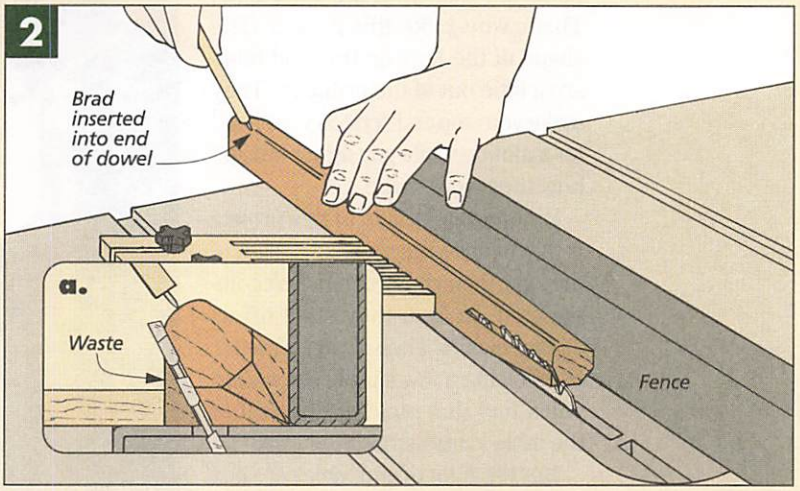

Finger Joint Plugs

When it comes to plugging the voids created by the groove for the bottom of finger joint boxes, I use a simple techinique.

Instead of trying to cut plugs to exact thickness for the holes, I simply use the test piece I have left over from cutting the finger joints for each box.

All I do is sand a taper on the end of the test piece to taper the fingers, see Fig. 1. Then with a hand saw, I cut the fingers off lengthwise, one by one.

Now all that's left is to glue the plugs into place, then trim and sand them flush with the surface of the box, see Fig. 2.

Finger Joint Kerfs

Before making the finger joints for the projects in this issue, you may want to take a look at your saw blade.

If you use a crosscut blade, for example, you could end up with finger joints that look those in the top drawing at the right.

That's because most crosscut blades (and some combination blades) have teeth that are ground across the top at an angle. This leaves a peak in the middle of the kerf.

A rip blade, on the other hand, usually has teeth that are ground flat across the top. So you wind up with a nice, flat-bottomed kerf, see bottom drawing. (Just make sure to use an auxiliary fence to prevent chipout.)

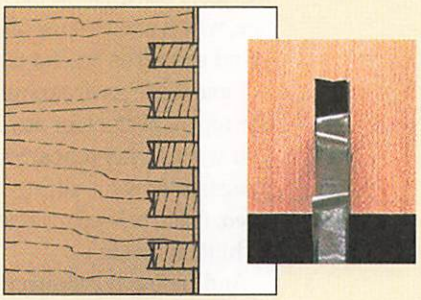

▲ *Crosscut blades have teeth that are ground across the top at an angle, leaving a peak in the kerf.*

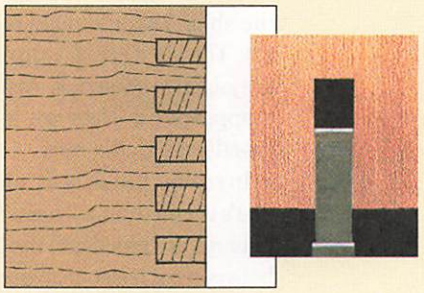

▲ *The teeth on a rip blade are ground flat across the top, producing a flat-bottomed kerf.*

END TABLE

The clean lines and basic construction are reminiscent of traditional furniture. But the unusual shape of the legs give this table a modern feel.

Tapered or turned, straight or curved, the legs are the first thing I look at when checking out a table. That's why I like this project. The shape of the legs on this end table are a little out of the ordinary. They make you stop and scratch your head for a minute while you figure out just how they were made.

But the real beauty of this project is that despite the unusual design of the legs, their construction isn't complicated. In fact, they start off as square blanks. Then it's just a matter of following a few simple steps. And you'll find that building the rest of the table is also straightforward.

STORAGE. A lot of end tables are just that — a table and nothing else. But this table has a couple places for storage, which makes it useful as a nightstand as well as an end table.

First, there's a drawer underneath the top — perfect for any items that you want to keep nearby but don't necessarily want sitting out in the open. (I like to keep my reading glasses hidden inside.)

And below the drawer, there's a shelf (so you won't have an excuse for leaving books or magazines lying around on top of the table).

JOINERY. While I'm on the subject of the shelf, I should point out the joinery. The shelf is made up of slats that are joined to shelf rails. At first glance, it appears the slats are individually mortised into the rails.

In reality, the slats fit into a groove that's cut on the shelf rails. Small spacer plugs are glued into the grooves in between each slat to create the "mortises" for each slat.

The rest of the joinery is fairly traditional. The base of the table is constructed with mortise and tenon joints. And the drawer front features half-blind dovetails. (We used a router and a dovetail jig to cut these.)

CONTRASTING WOODS. Probably the most difficult decision will be figuring out what kind of wood to use. We selected hard maple for the legs, aprons, and shelf of the table. Then to provide a warm contrast, we chose cherry for the top. Finally, we added a simple cherry knob to the drawer to tie it all together.

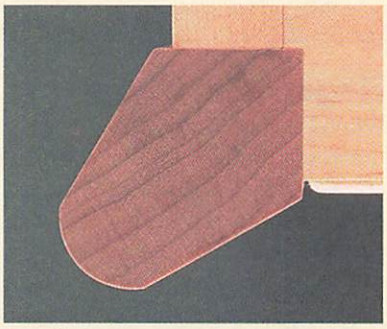

▲ *The legs on this table actually start off as square blanks. Then they're tapered, beveled, and rounded to a "diamond" shape.*

Construction Details

OVERALL DIMENSIONS:
19"W x 24"H x 19"D

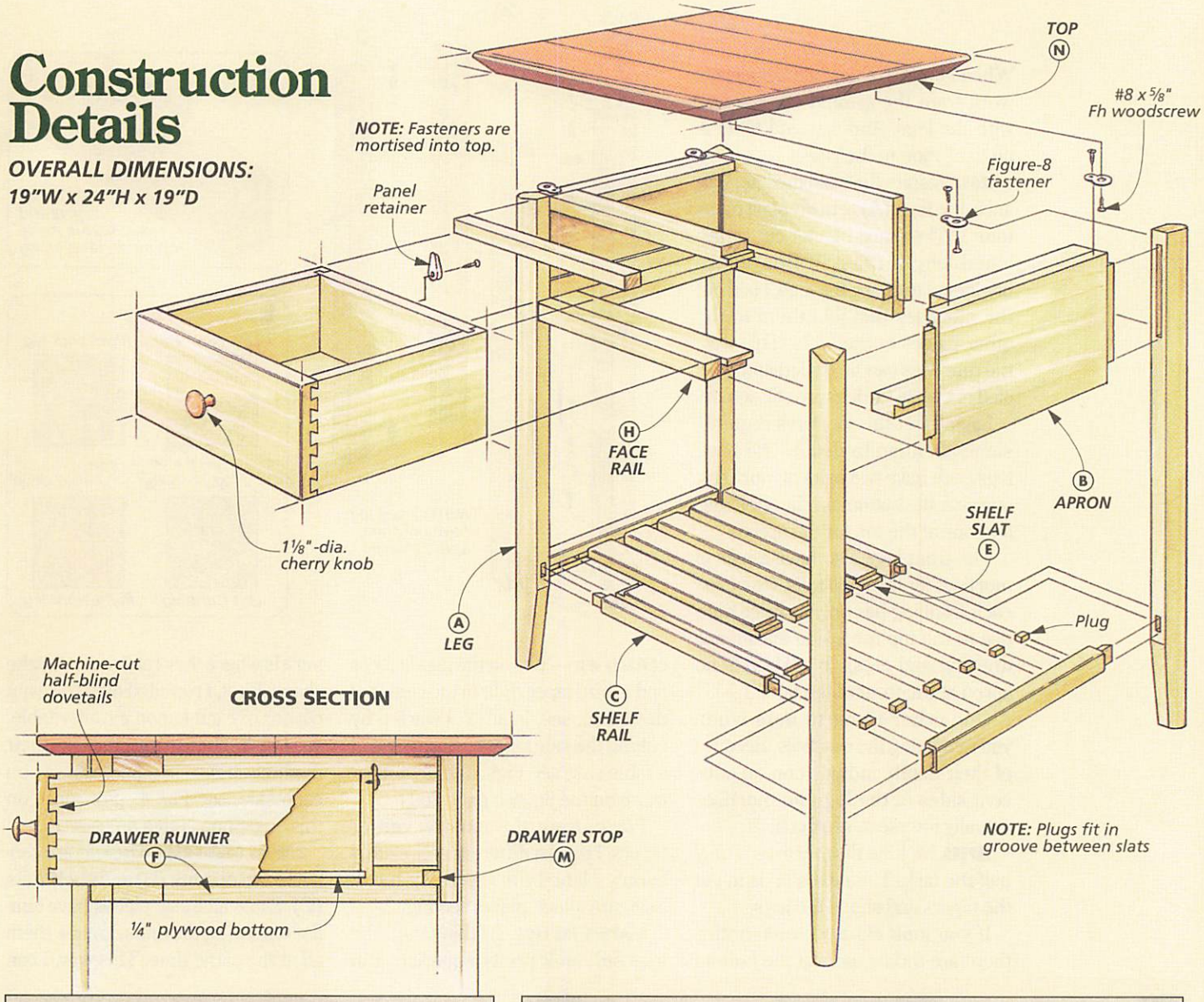

MATERIALS

A	Legs (4)	1 5/8 x 1 5/8 - 23 1/4
B	Aprons (3)	3/4 x 5 7/8 x 14 1/4
C	Shelf Rails (4)	3/4 x 1 - 14 1/4
D	Drawer Rails (2)	3/4 x 2 - 14
E	Shelf Slats (5)	3/8 x 2 - 13 3/4
F	Drawer Runners (4)	3/4 x 1 1/4 - 11
G	Drawer Guides (2)	5/32 x 3/4 - 13
H	Face Rails (2)	3/4 x 7/8 - 13
I	Drawer Front (1)	3/4 x 4 3/8 - 12 15/16
J	Drawer Back (1)	1/2 x 4 3/8 - 12 7/16
K	Drawer Sides (2)	1/2 x 4 3/8 - 13
L	Drawer Bottom (1)	1/4 ply. - 12 7/16 x 12 11/16
M	Drawer Stop (1)	3/4 x 1/2* - 12 15/16
N	Top (1)	3/4 x 19 - 19

*Actual width will be determined by drawer size

SUPPLIES

- (1) 1 1/8"-dia. Cherry Knob w/screw
- (4) Figure-8 Tabletop Fasteners
- (8) #8 x 5/8" Fh woodscrews
- (1) Flush-mount Panel Retainer w/screw

CUTTING DIAGRAM

1 3/4" x 4" - 48" Maple (2.7 Bd. Ft.)

NOTE: *Edge glue boards to make top*

3/4" x 5 1/2" - 84" Cherry (3.2 Bd. Ft.)

3/4" x 7" - 84" Maple (4.1 Bd. Ft.)

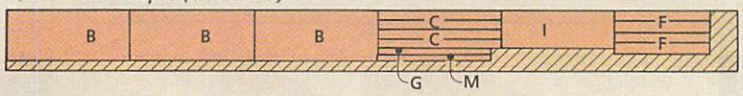

3/4" x 5 1/2" - 60" Maple (2.3 Bd. Ft.)

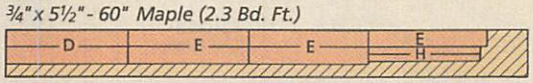

1/2" x 5 1/2" - 48" Maple (1.8 Sq. Ft.)

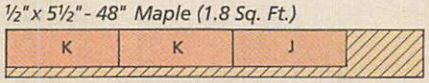

Also needed: *24" x 48" sheet of 1/4" plywood*

When I build a table, I almost always work from the ground up, starting with the legs. And this end table is no exception to the rule.

LEGS. Despite their finished appearance, the **legs (A)** actually start off as four 1⅝" square blanks cut to finished length (23¼"). But before beginning to shape the legs, I laid out the mortises that join them to the other pieces of the table. This way, the mortises can be drilled and chiseled out while the legs are still square.

Laying out the mortises requires some attention to detail. The back legs each have two pairs of mortises, one near the bottom for the shelf rails and one at the top for the aprons.

The front legs also have a pair of mortises for the shelf rails. However, each front leg has only a single mortise at the top for a side apron, see drawing and detail 'b'. (There's no apron at the front of the table.)

One other thing to note when you're making the mortises. Because of their depth and position on adjacent sides of the leg, the mortises actually intersect, see detail 'b'.

TAPERS. Making the mortises is only half the task. The next step is to cut the tapers and shape the legs.

If you look closely, you'll notice there are three tapers at the bottom of each leg — two on the inside faces and a third taper right in the center of these two, see detail 'a'. I started by cutting the side tapers using a jig and a table saw, see Figs. 1 and 1a. (For more on the jig, see page 26.)

For cutting the narrow center tapers, I used a different approach. I simply planed the tapers by hand, using my block plane, see Fig. 2.

SHAPING THE LEGS. At this point, the legs still look pretty squarish. But here is where they really start to take shape. First, I rounded over the front corner of each leg on a router table, see Fig. 3. Then to give the legs their distinct shape, I ripped a bevel on each side, see Fig. 4. (For more on this, see Shop Notes on page 19.)

APRONS & SHELF RAILS. The legs are connected by **aprons (B)** and **shelf rails (C)**. Since all these pieces have similar tenons on the ends, I made them all at the same time. This way, I can

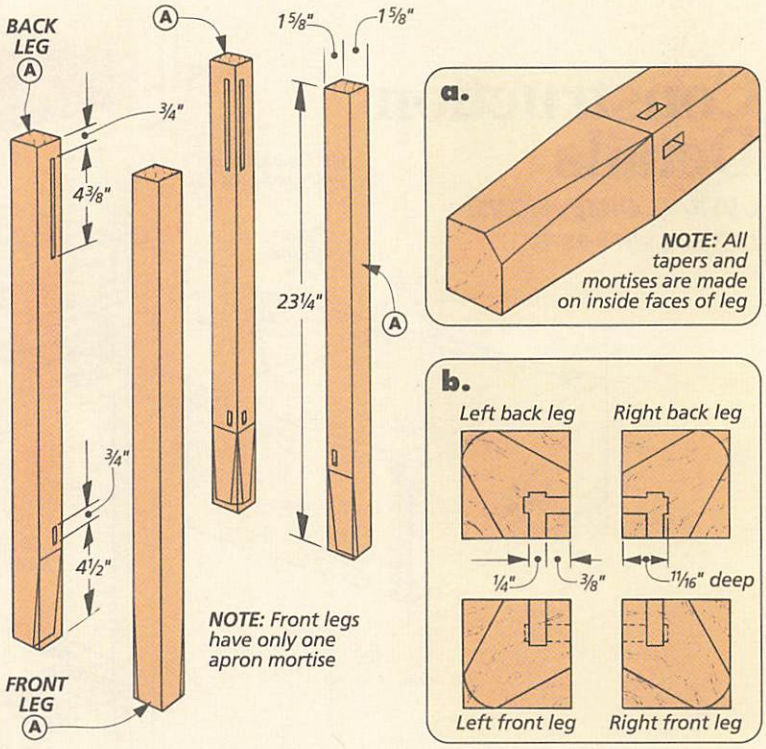

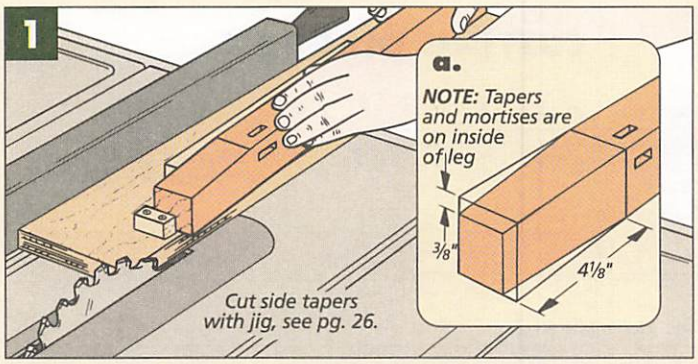

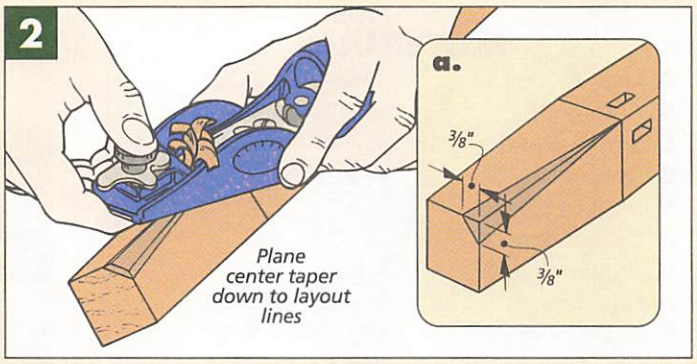

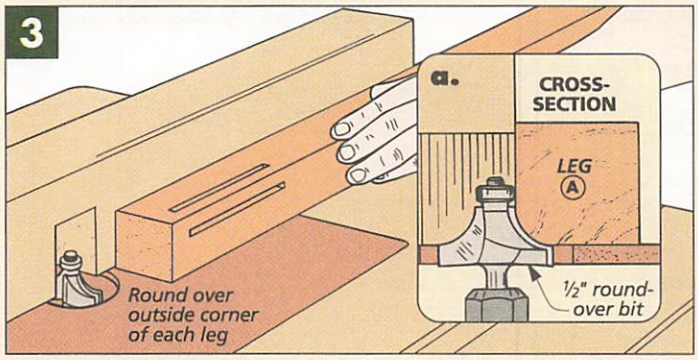

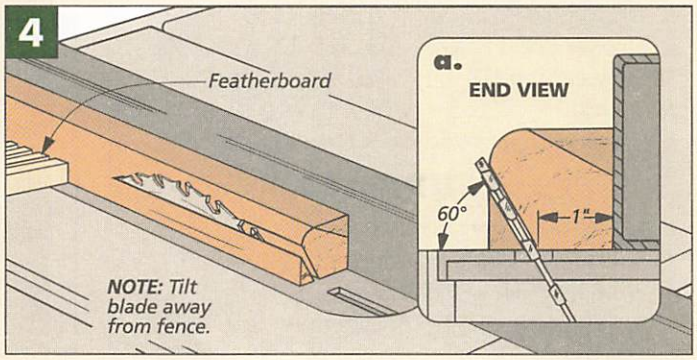

cut all the tenons at once without having to duplicate my saw setup, see drawing at right and detail 'a'.

To maximize the gluing surface of the tenons, I made them 5/8"-long. But this creates a small problem. Because of their length and position, the tenons run into each other. To correct this, I just mitered the ends, see detail 'b'.

There are a couple more steps to complete the aprons and shelf rails. First, a pair of grooves is cut in the two side aprons to hold some of the drawer support pieces that are added later, see detail 'a'. Then I rounded over the bottom outside edge of all the aprons.

The shelf rails get a similar treatment. The two side shelf rails are grooved — but this groove is to hold some shelf slats, see detail 'a'. And roundovers are routed on all the edges of the shelf rails.

SIDE ASSEMBLY. At this point, I decided to go ahead and assemble the two sides of the table, see drawing. This makes it a little easier when it comes time to assemble the rest of the table. (For more on gluing up the sides, see Shop Notes on page 18.)

DRAWER RAILS & SHELF SLATS. While the two table sides were drying, I began work on the drawer rails and shelf slats. I started by cutting a couple of **drawer rails (D)** out of 3/4"-thick stock. Then I cut rabbets on the ends of these pieces to create tongues that fit in the grooves of the side aprons, see detail 'a' below.

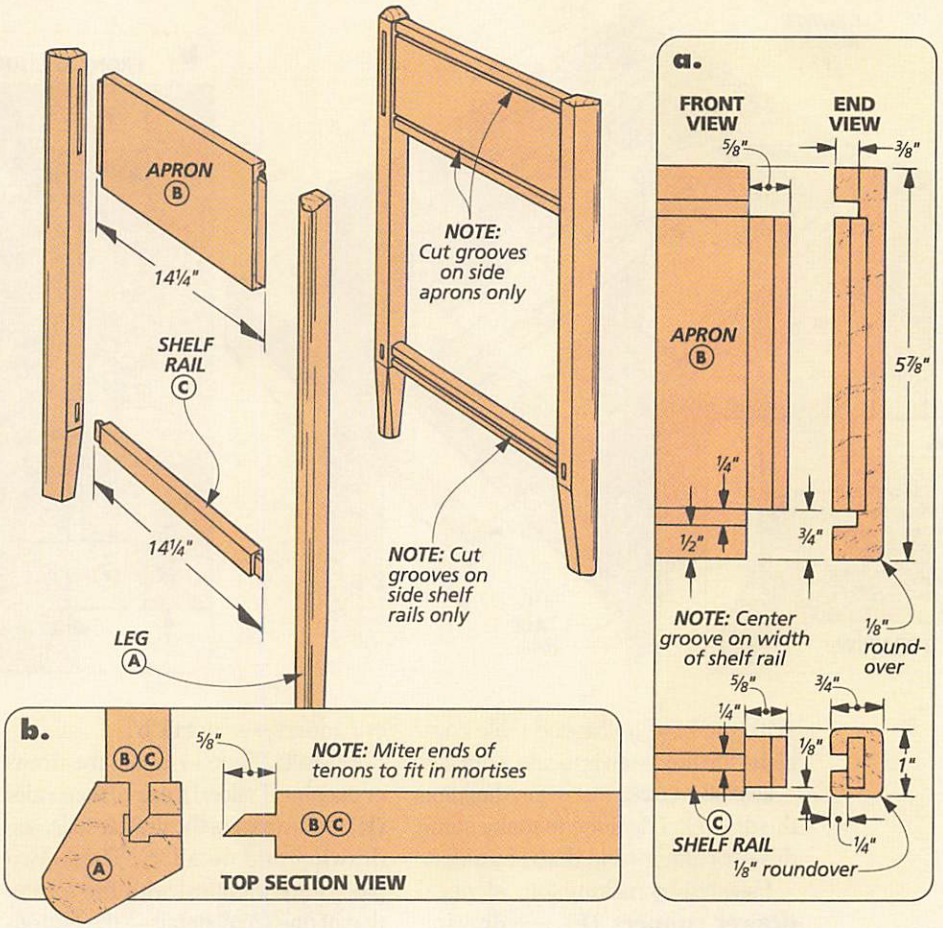

The **shelf slats (E)** are cut from 3/8"-thick stock. And like the drawer rails, the ends of the shelf slats are also rabbetted — but this time to fit in the grooves in the shelf rails, see detail 'b' below. Then to complete the slats, simply round over the top edges.

Since the shelf slats are held in the shelf rail grooves without any glue, I needed a way to keep them evenly spaced. So, I glued small wooden plugs into the grooves to act as spacers, see detail 'c'.

Finally, the side assemblies can be glued together, sandwiching the back apron, shelf rails, drawer rails, and shelf slats in between, see drawing.

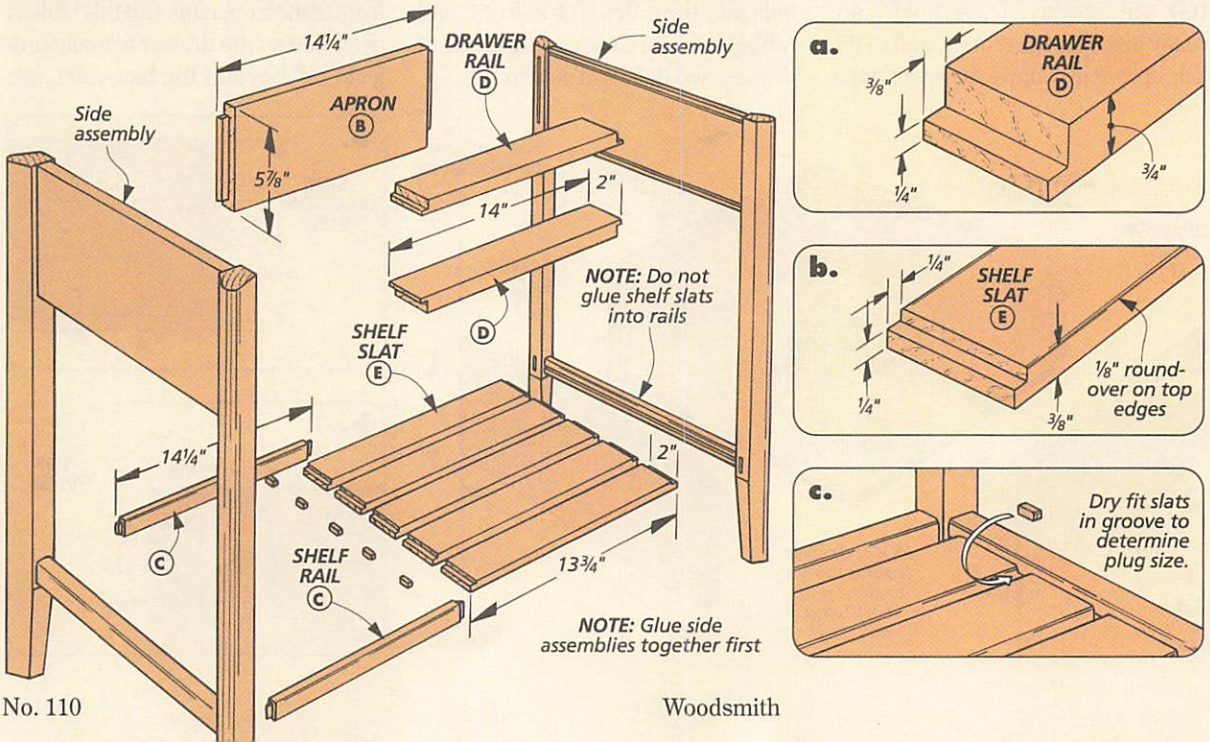

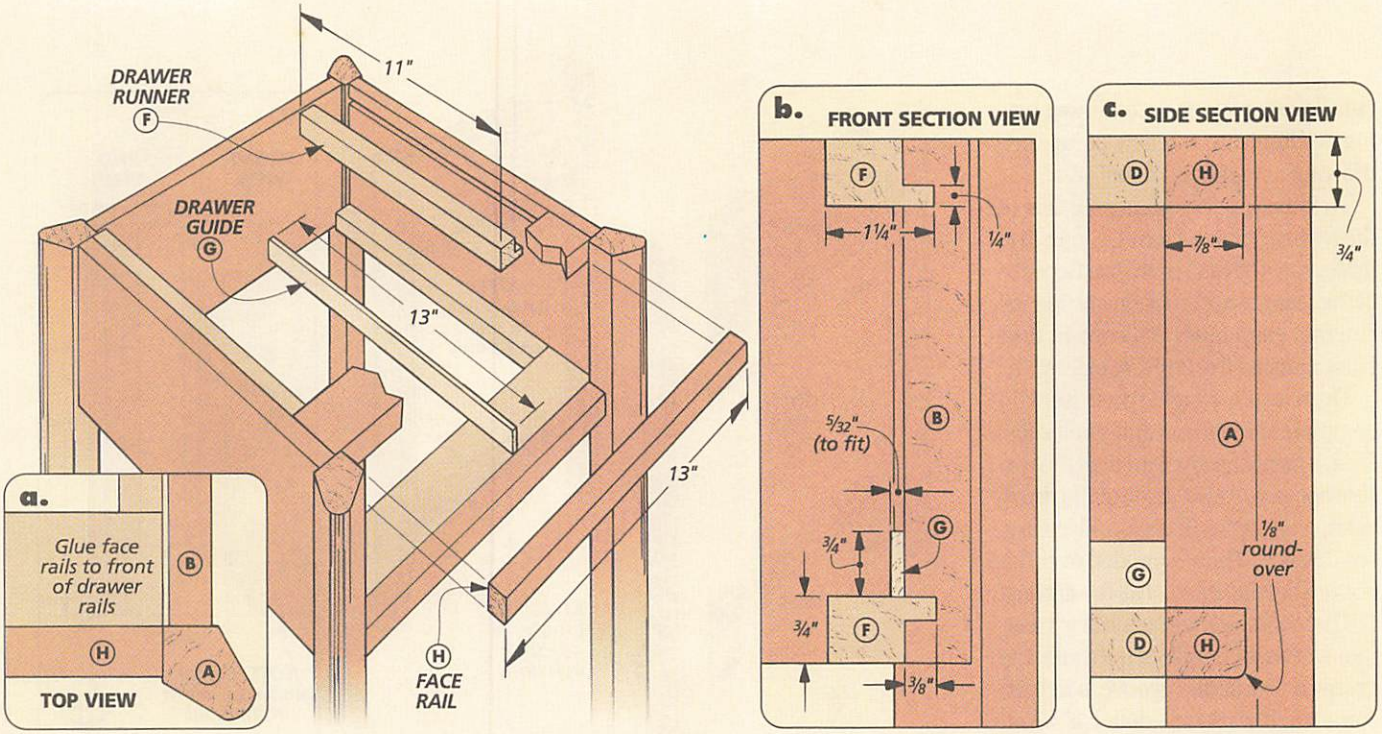

With the base of the end table complete, the next step is to add a drawer.

RUNNERS & GUIDES. But before building the drawer, I decided to make some drawer runners and drawer guides.

I started by making four identical **drawer runners (F)**, see drawing above and detail 'b'. These are glued into the grooves in the side aprons. Technically, only two of these pieces are runners (the two on the bottom). The other two keep the drawer from tilting up as it's pulled open.

To keep the drawer from shifting from side to side within the opening, I added a couple of **drawer guides (G)**, see drawing. These guides are really just fillers that are glued to the side aprons just above the lower drawer runners, see detail 'b'.

FACE RAILS. Then to create the drawer opening, I added a pair of **face rails (H)** to the front of the drawer rails, see drawing and detail 'c'. These two pieces are identical with the exception of one small detail — the bottom piece has an ⅛" roundover routed on the bottom, outside edge.

DRAWER. With the face rails added, the next step is to make the drawer. There aren't any surprises here. The **drawer front (I)** is cut from ¾"-thick stock, while ½"-thick stock is used for the **drawer back (J)** and two **drawer sides (K)**. Half-blind dovetails join the sides to the front, and rabbet joints are used at the back of drawer, see details 'a' and 'b'.

After cutting grooves on the inside faces of the drawer pieces, a **drawer bottom (L)** can be cut out of ¼" plywood, see drawing. Then the drawer can be assembled.

To complete the drawer, I routed ⅛" roundovers on the outside edges of the drawer front and added a 1⅛"-dia. cherry knob. Finally, I added a plastic panel retainer to the back of the drawer to prevent accidentally pulling the drawer all the way out of the opening, see drawing.

DRAWER STOP. There's one more step before the drawer can be placed in the table. Most drawers fit flush with the front of their opening. But this table is designed so the drawer actually projects ⅛" beyond the face rails, see

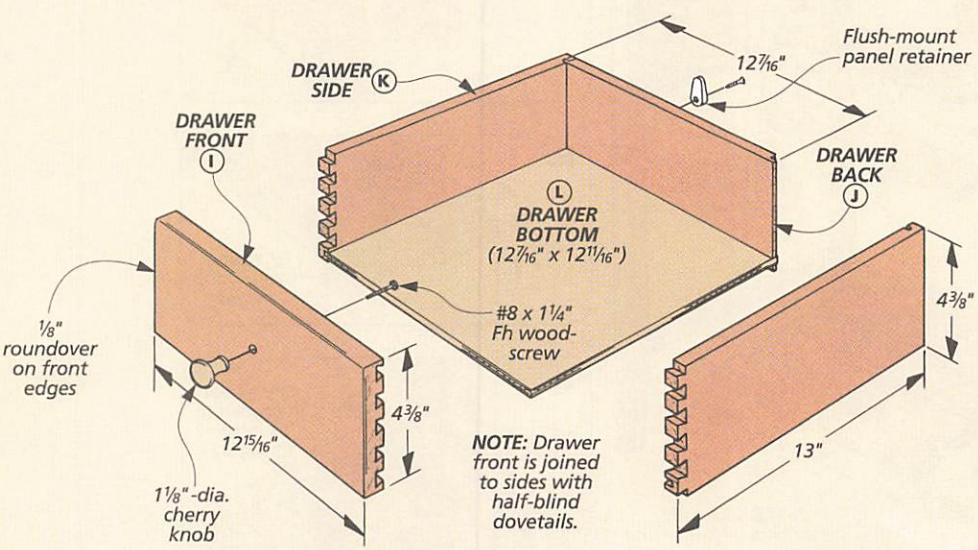

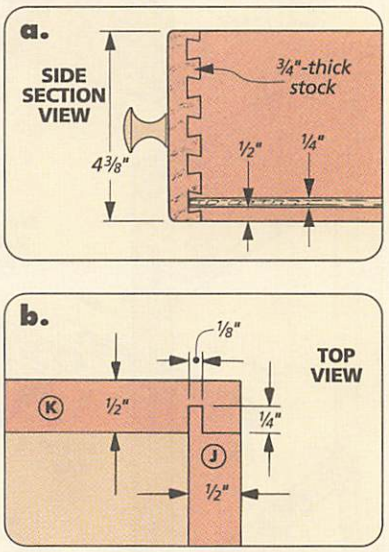

detail 'b' at right. To create this projection, I added a **drawer stop (M)**.

To determine the width of the drawer stop, just place the drawer in the opening so it sticks out 1/8". Then measure the distance between the back apron and the back of the drawer. After cutting the drawer stop to size, it's just glued in place against the back apron, see detail 'a' at right.

TOP. Now all that's needed to complete the table is to add a **top (N)**. To do this I started by gluing up an oversize blank out of 3/4"-thick cherry stock, see drawing at right.

After cutting the blank to size, I cut a 60° bevel on the underside of all the edges of the top. (Note: I attached a tall auxiliary fence to my rip fence for extra support, see Fig. 5.)

Next, to soften the sharp edges of the top, I rounded over the top edges with a router and a 1/4" roundover bit, see Fig. 6.

The top is attached to the table with figure-eight fasteners. Normally, these fasteners are mortised into the aprons of a table and then attached to the top from the underside, inside the aprons. But the problem with this type of arrangement is the overhanging edges of the top can often cup upward as the humidity changes, since they aren't fastened down.

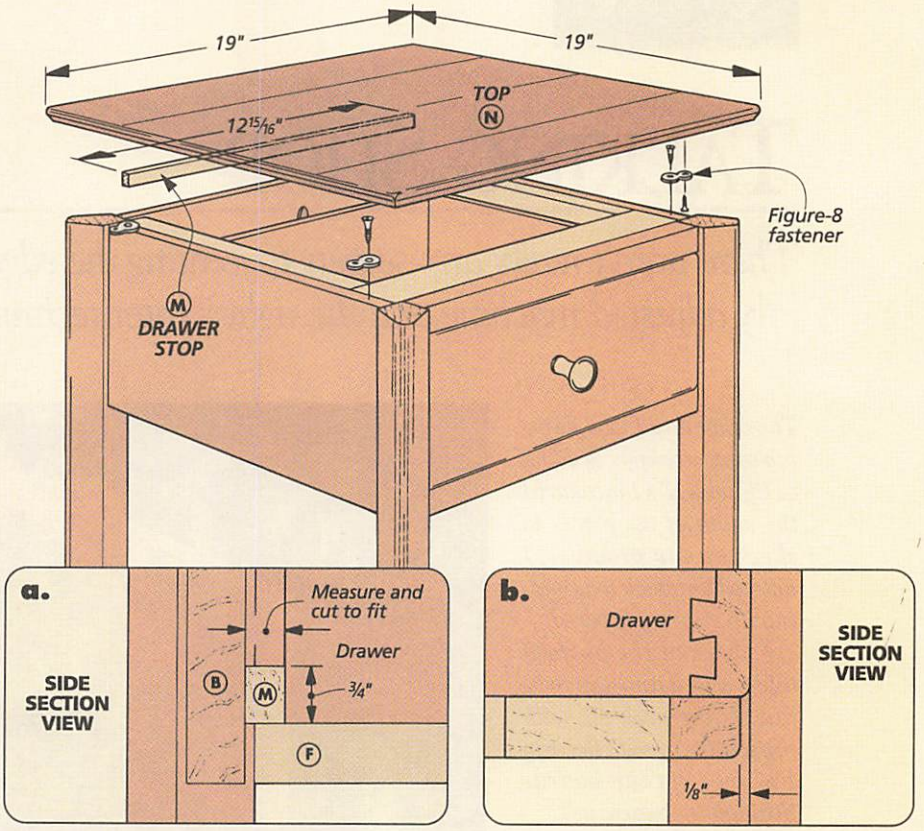

To help prevent this, I mortised the fasteners into the top instead. This way, I was able to position them closer to the outside edge of the top. (This helps to draw the top down flat.) And the shallow mortises help keep the fasteners hidden from view.

Mortising the fasteners into the top is simple. Just start by attaching the fasteners to the table aprons, see Fig. 7. Next, position the top on the table and trace the outline of the fasteners on the underside of the top.

Now just remove the top and drill two overlapping holes to create a mortise for each fastener, see Fig. 8.

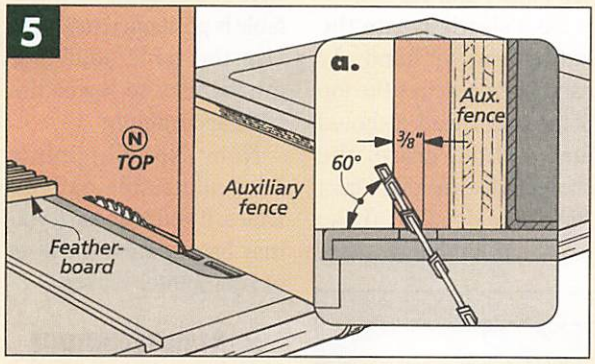

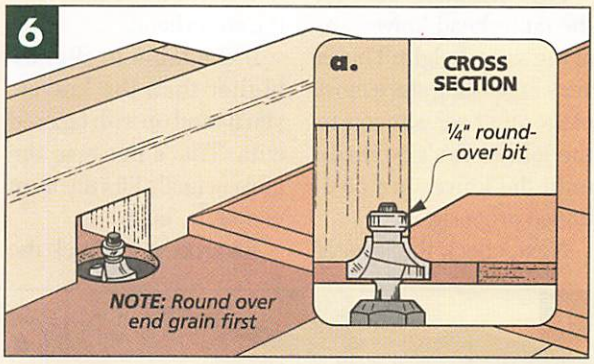

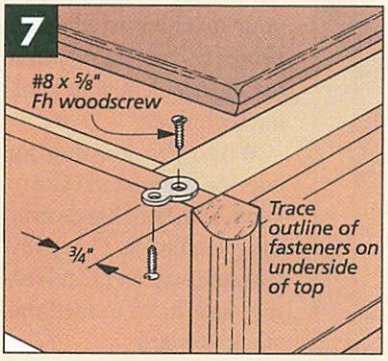

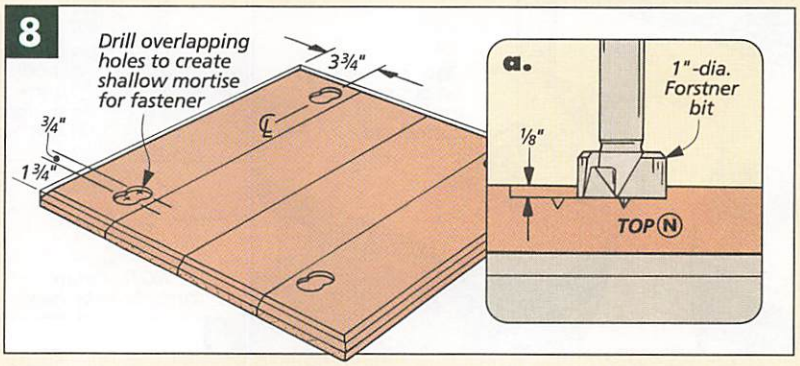

TALKING SHOP

There aren't really any secrets to jointing the edge of a board. Just a properly adjusted machine and the right jointer technique.

The other day I was jointing some workpieces down to 1¾" wide. As I measured the width of the pieces to check on my progress, I noticed the stock was ending up slightly tapered.

I checked the outfeed table, and it appears to be flat. Is the problem with my jointer, or with the way I'm feeding the boards through the machine?

M. McMahon
Greensboro, N. Carolina

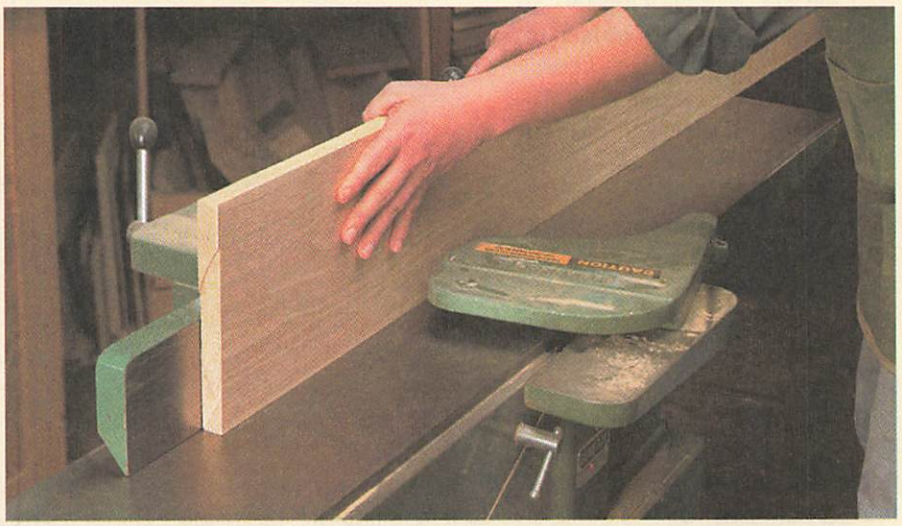

Tapered cuts are usually caused by an improperly adjusted jointer, so let's start by taking a look at your machine.

First off, make sure all the cutterhead knives are at the same height. This is very important, since most of the other adjustments to the jointer can't be made until the knives are positioned properly.

Next, check the level of your outfeed table in relation to the height of the knives. In order for a jointer to work properly, the outfeed table should be exactly level with the knives in the cutterhead.

If the table is slightly higher than the knives, you'll wind up with tapered cuts. That's because the table actually lifts the front end of the board up.

All it takes to check the adjustment of the outfeed table is a straightedge. Just place the straightedge on your outfeed table so it overhangs the cutterhead, see Figs. 1 and 1a.

Now slowly rotate the cutterhead by hand. As each knife reaches the top of the cutterhead, it should just lightly graze the straightedge, making a faint "tick", see detail 'a'. (I like to use an aluminum square for this test because it lessens the chance of damaging the knives.)

But if the knives pass under the straightedge without touching it, the table is positioned too high. Use the table adjusting mechanism to lower the table accordingly.

Note: Not all jointers have adjustable outfeed tables. If yours doesn't, you may have to raise the level of your jointer knives.

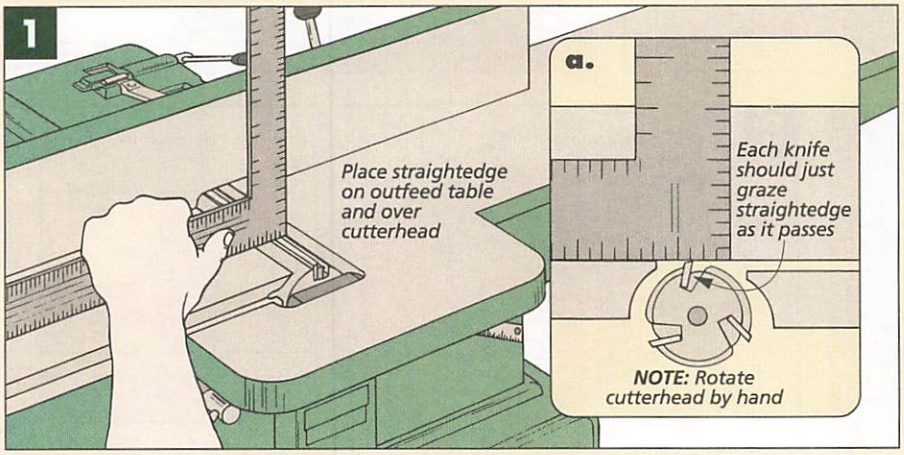

JOINTER TECHNIQUE

Once you've made sure your machine is adjusted properly, you might want to take a look at your jointing technique.

When I'm jointing an edge on the jointer, I like to begin with both hands over the infeed table. I keep my left hand stationery and use my right hand to feed the stock forward.

Then once the board reaches the outfeed table, I move my left hand forward to hold the stock firmly against the outfeed table and fence, see Fig. 2.

But aside from technique and adjustment, there's another point to consider. It may be that the jointer is not the right tool for the job.

A jointer isn't really designed to reduce the width or thickness of a workpiece. The main purpose of a jointer is to straighten an edge or flatten the face of a board.

When I need to trim a board down to a specific width, I'll joint one edge first. Then I'll rip the piece to width on the table saw.

If you try to joint both edges of the board on a jointer, you'll end up with two straight edges, but they may not be parallel.

So why not just use a table saw for both edges? Even with an accurate table saw and rip fence, you can still get uneven edges.

That's because most surfaced boards that are purchased from a lumberyard don't have perfectly straight edges. So they won't fit tight against the rip fence of the table saw unless they're jointed first.

EDGE JOINTING

But there's more to jointing an edge than simply running a board across a jointer. To get good results, I like to follow a few rules.

First, I set my jointer to take a light cut (about 1/32"). Not only does this produce a smoother cut, but it's also easier on the jointer knives.

The only exception is when I'm jointing a very rough edge and I need to remove a lot of material quickly. Then I increase the depth of cut to about 1/16".

But on the final pass, I'll set the depth of cut back down to remove only 1/32" or less of material. This leaves a nice, smooth edge.

Second, I feed the board through the jointer at a slow, even rate. This helps prevent the "rippled" edge you sometimes get from feeding the stock too fast.

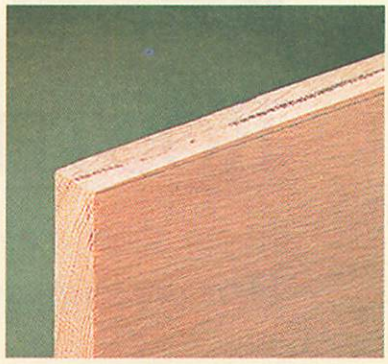

▲ *Before jointing a board, draw a line on the edge. When the jointer has removed the entire line, you know the edge is straight.*

Finally, I mark the face of the board near the jointed edge with an 'X'. That way, I'll know which edge to place against the rip fence of my saw, see Fig 3. W

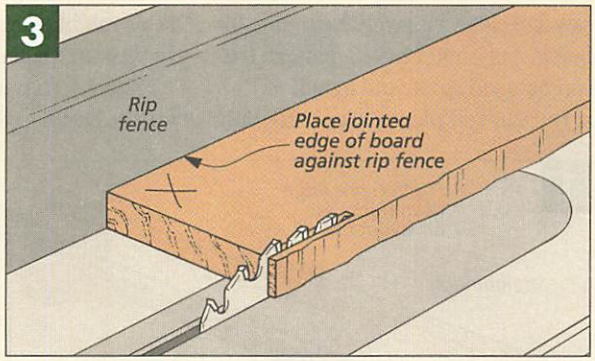

JOINTING THE FACE OF A BOARD

In addition to jointing an edge, a jointer is also the best tool to use for flattening a cupped board. (A thickness planer won't actually flatten a board, it will only make it thinner.)

As with edge jointing, when jointing the face of a board, I place the piece so the cupped side faces down, see detail 'a'. This way, the board can ride on the two edges.

As a safety precaution, I always use push blocks when face jointing, see drawing below. And I try to avoid jointing any material under 1/4"-thick. The force of the jointer knives can cause the workpiece to fracture apart.

Once I have one face of the board flat, I switch to the thickness planer to make the second face flat and parallel to the first.

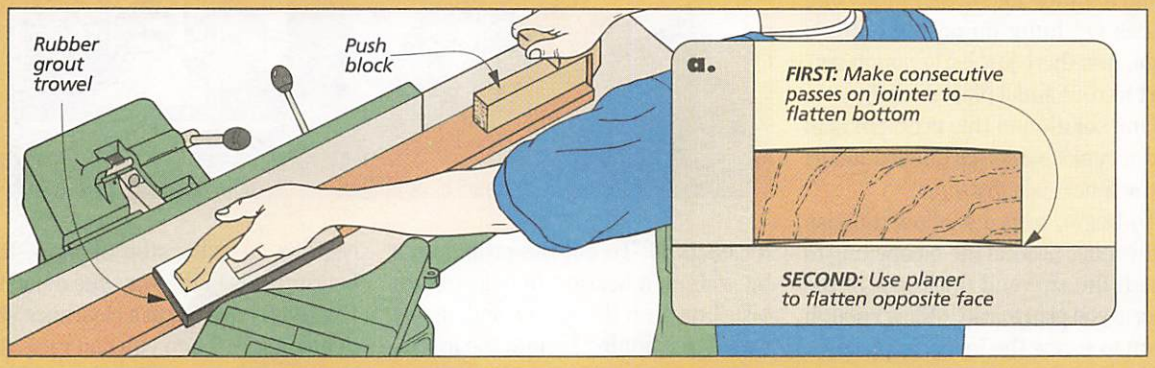

ROUTER TABLE TIPS

In our shop, the router table gets a workout on just about every project. Here are four pages of our favorite tips we've collected over the years.

I first mounted a router under a table back in 1979 (*Woodsmith* No. 5). At that time, I was amazed at how much more versatile my router was when attached underneath a small table. And now, nearly 20 years and two designs later, I use a router table on nearly every project I build.

As I was thinking about all the different ways we make use of our router table and all the tips our readers have sent in over the years, I thought it might be a good idea to come up with a list of our favorite router table tips. So here they are...some of our best.

CUTTING PROFILES WITH TEMPLATES

When making several curved pieces that are identical, I create a 1/4" hardboard template and use a flush trim bit, see photo in margin. This way, I can rough out the shape with the band saw and clean it up with the router. It's quick, easy, and I have a pattern that can be used again and again.

But curved pieces aren't the only thing a template and a flush trim bit are good for. They can be helpful with making straight cuts too.

For instance, when working on a base that has two profiles connected by a straight edge, I have a procedure that ensures a perfectly straight line.

First, I rough out the straight line with a band saw. Then I attach a straight template with double-sided carpet tape flush with the layout line, see Fig. 1. Now the flush trim bit can clean up the edge, see Fig. 2.

You do have to stop short of the profile though — the bearing won't let you rout tight into a corner. But the template will also help guide your chisel as you clean up the corner.

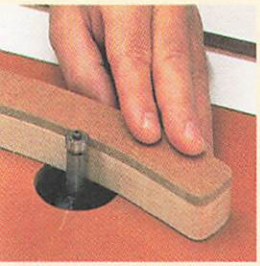

▲ *To make curved pieces that are identical, I use a hardboard template and a flush trim bit.*

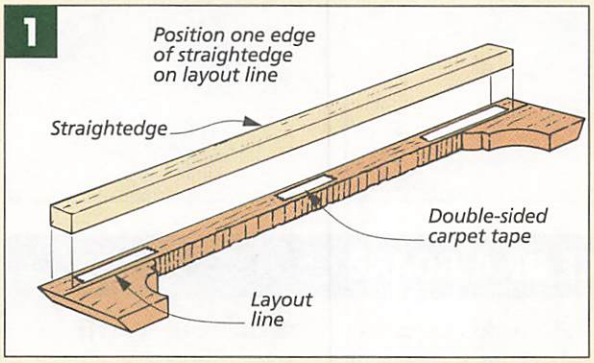

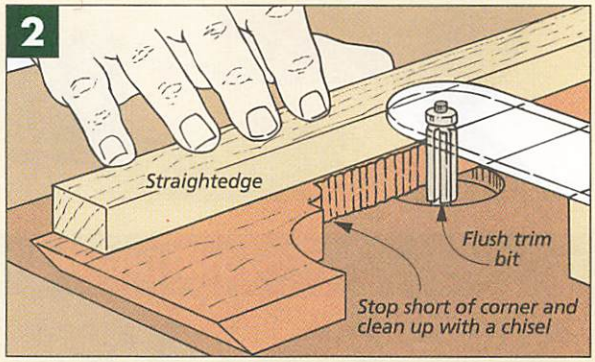

ROUTER BIT INSERTS

The problem with router table fences is that the opening for the bit is often much too wide for smaller bits. Long pieces get hung up on the outfeed edge. And there just isn't enough support to rout small pieces safely.

One solution to this problem is to add a replaceable hardboard insert to the fence, see drawing.

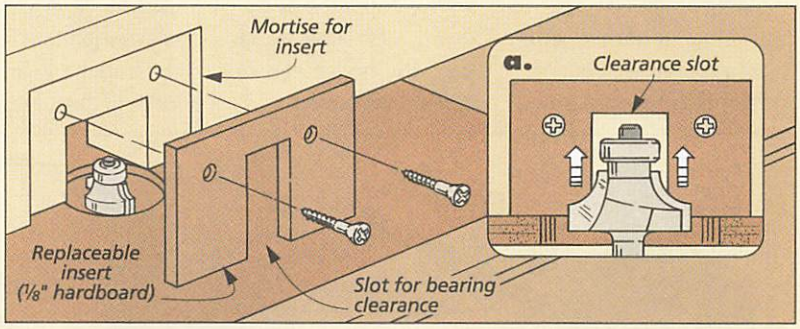

To begin, rout a shallow mortise in the fence around the bit opening to match the size and thickness of the inserts you plan to use. (Allow enough room to screw the insert in place.)

Now you can make a custom insert for each bit. To cut the profile on a bit without a bearing (like a straight bit), I turn on the router and slowly raise the spinning bit into the insert.

Profile bits (like round-over bits) require an extra step because the bearing gets in the way, see detail 'a.' First, you have to cut a clearance slot in the insert. Then you can raise the bit to create the profile.

MULTIPLE PASSES

Anytime you're routing deep grooves, it's a good idea to take two or more passes. But with my router, there's too much play in the mechanism that controls the depth of cut — a problem that's typical of many routers.

So what happens is that when I change the depth of the bit for the second pass, the bit will cut at a slightly different point than it did on the first pass. Each successive pass leaves a little step on one side of the groove, see photo below right.

To solve this problem, instead of raising the router bit, I lower the workpiece. First I set the bit to cut the full depth of the groove. Then I use a 1/4"-thick spacer to "raise" the workpiece, see drawing above.

My spacer is 1/4" hardboard with a clearance opening cut for the bit. But to make it easy to secure, I also add a cleat to each end.

Now, with the spacer in place, the first pass will be a shallow one, see detail 'a'. Then to make the full depth of cut, simply remove the spacer and take another pass, see detail 'b'.

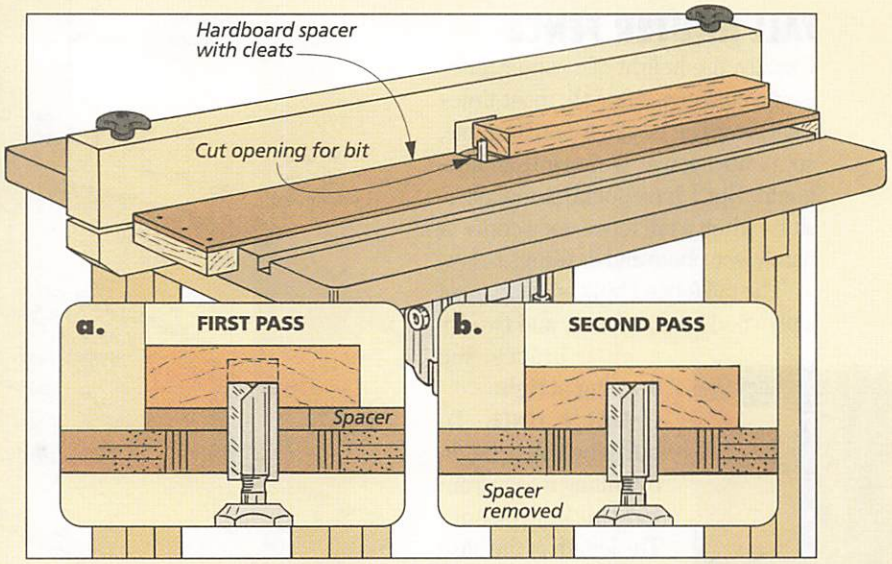

This technique works in other situations, too. Sometimes, when routing a profile in a wood that has a tendency to burn (like cherry), I will use a thin piece of cardboard as a spacer. Most of the profile is cut with the first pass. But when the cardboard is removed, the lighter second pass will create a smooth, clean cut.

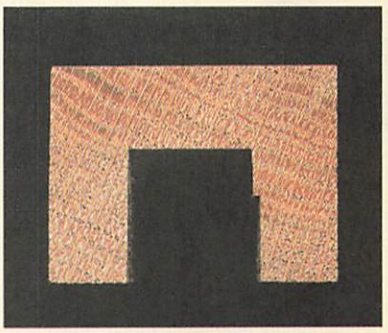

◄ *If you're cutting a groove in more than one pass, you may end up with a stepped cut on the second pass.*

RUB ARM

I often rout a full roundover along the edges of a workpiece, whether it's a piece of molding or the top of an end table. But this procedure isn't quite as straightforward as you might expect.

The problem is with the bit's guide bearing. The first pass isn't a problem. There's plenty of surface for the bearing to ride against. But when you flip the piece over to complete the roundover, there's nothing for the bearing to ride against. And the bit cuts a shoulder instead of a smooth roundover, see margin drawing.

Normally, the solution here is simple. I use the fence to guide the workpiece, refer to Fig. 6 on page 25.

USING A RUB ARM. But what about when the piece is curved? Here, I use a rub arm, see drawing. It acts as a substitute bearing surface, and when installed, it rubs against the centerpoint of the workpiece, see detail 'a'. This prevents the bit from removing too much stock.

CONSTRUCTION. To make a rub arm, start with a piece of 1/4" hardboard and cut a notch wide enough to fit around the bearing. Then glue a base piece under the arm, see drawing.

Even though the notch is wide enough, it still may not fit around the bearing — the bit's cutting edge may be in the way because the rub arm fits around the bit below the bearing, see detail 'a'. If so, you'll have to rout the profile inside the notch. I turned on the router and fed the arm into the bit. Then after the router is turned off, I align the front of the arm flush with the bearing and clamp it to the table, see detail 'a'.

Now that the rub arm is installed, full roundovers can be routed without creating any unwanted shoulder.

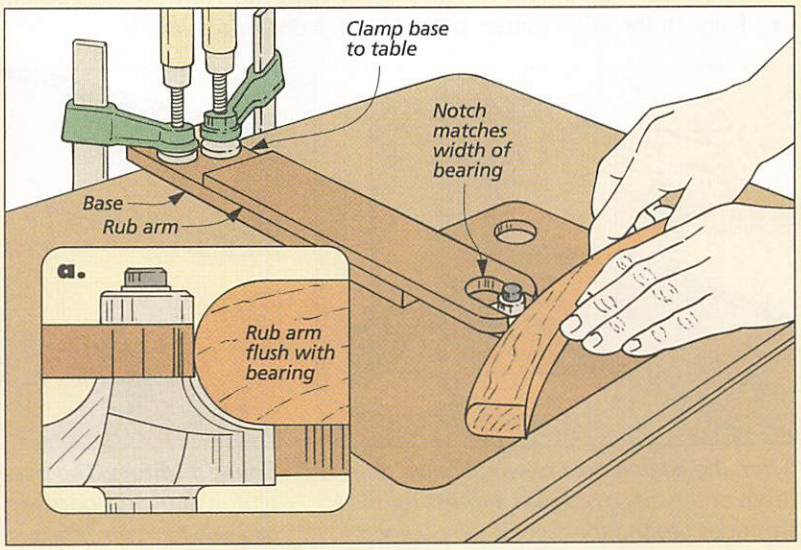

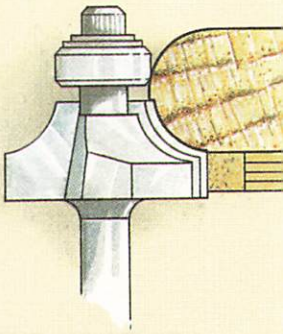

▲ *When routing a full roundover, the second pass can leave an unwanted shoulder.*

TALL ROUTER FENCE

Usually, the height of a router fence isn't a concern. After all, most times a tall piece can be laid flat on the table, so a short fence is more than adequate. But I have found a few occasions when a tall fence does come in handy, see photo and drawings below.

The tall fence I built is made up of a plywood base, a fence, and two triangular braces, see drawing at right.

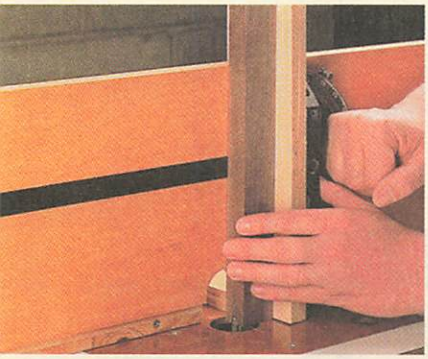

▲ *This tall fence allows you to rout the end of a long workpiece.*

BASE & FENCE. To build the fence, begin by cutting a base from 3/4"-thick plywood. The length of the base should equal the top of your router table. Then you can cut the 9"-high fence to this same length.

NOTCH FOR BIT. Next, to provide clearance for the router bit, I cut a notch in the base and fence.

MITER GAUGE GROOVE. Then after the notches were cut, I cut a groove along the fence to hold my miter gauge.

Safety Note: The position of this groove is critical — don't cut it too low. The miter gauge should easily clear any router bit you use when the bit is set at its highest point.

AUXILIARY FENCE. The trick to using a miter gauge is holding it in the groove. To do this, I added a special auxiliary fence. This fence is screwed to the miter gauge and hooks behind the router table fence so the miter gauge can't fall out of the groove.

Note: When screwing the auxiliary fence to the miter gauge, position it 1/16" above the table. This gives you enough clearance to tilt the miter gauge, see details 'a' and 'b' above.

RABBET. Next, I cut a 1/4" x 1/2" rabbet along the bottom edge of the fence. This rabbet allows me to trim the edging flush on a plywood panel, see left drawing below.

BRACES. Next, cut two 7" x 7" triangular braces to support the fence. (Note: Make sure one corner of the triangle is exactly 90°.)

Finally, glue and screw the fence together. Then after the glue dries, wipe a coat of wax on the face of the fence and the miter gauge groove.

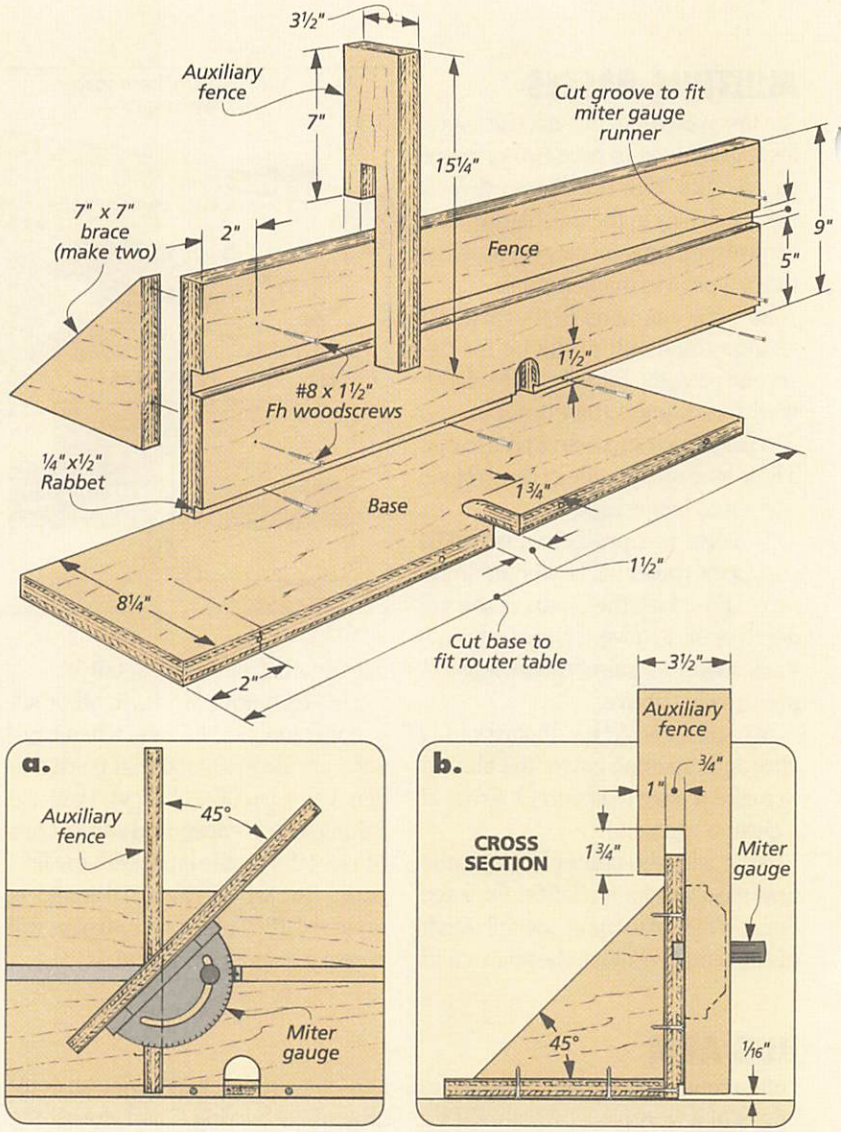

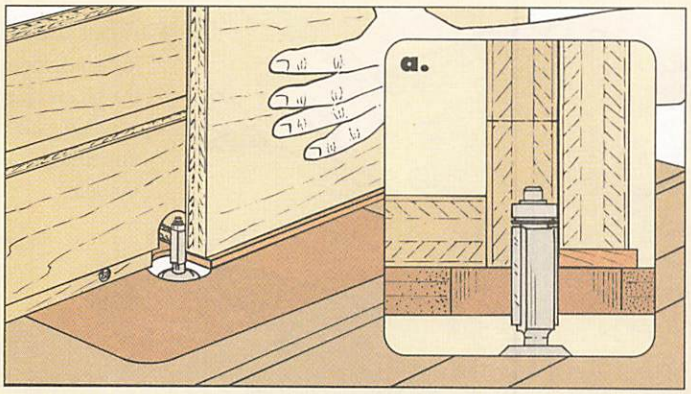

Flush Trimming. *To trim the edging on a plywood panel flush, a rabbet along the bottom of the fence provides a recess for the lip of the edging that protrudes beyond the face of the plywood.*

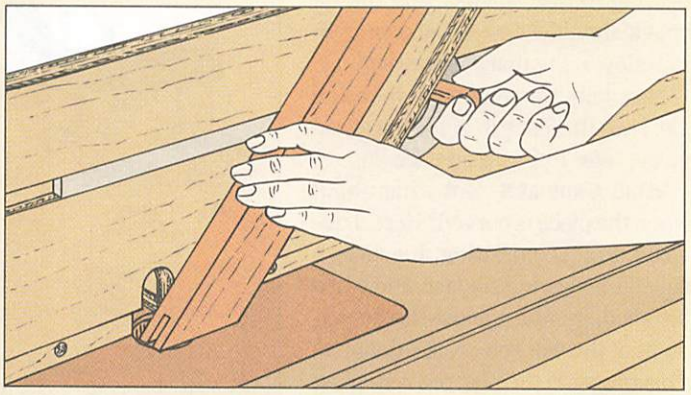

Splined Miters. *The miter gauge and auxiliary fence are able to tilt forward or backward, which really helps when you're routing grooves for splined miters.*

ROUTING SMALL PIECES

When routing small pieces on a router table, how do you keep the piece from tipping into the large hole in the table?

The first thing I do is add an auxiliary table made from hardboard, see drawing. In the center of the hardboard, I drill a hole that's slightly larger than the exposed part of the bit. To secure the auxiliary table, I slide it under the router fence (though you can just clamp it down).

When routing the piece, I also hold it with wood hand clamps. This way, my hands are never close to the bit.

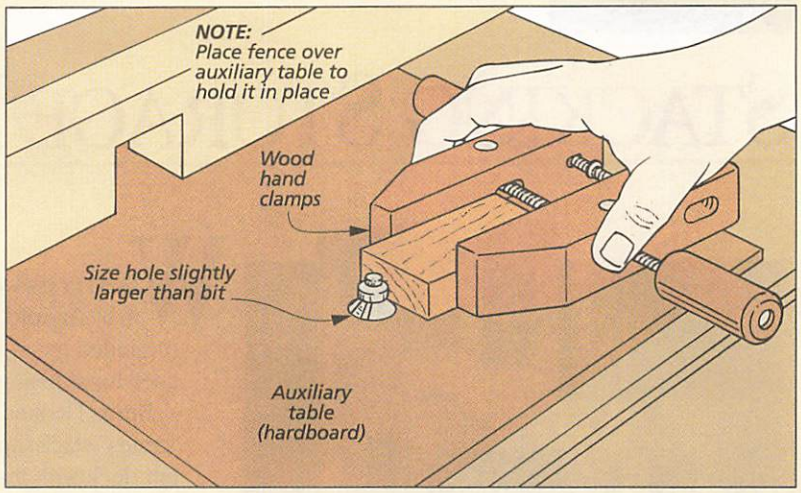

ROUTER PUSH BLOCK

When using a router table without a miter gauge slot, a push block is essential. It keeps pieces square and helps reduce chipout.

One push block I like starts out as a rectangular piece of 3/4" plywood. Then I add a hand hold to the top of the block flush with the front edge, see detail 'a'. And I cut away part of the plywood behind the hand hold.

Finally, I added a simple 3/4" dowel as a push handle. And to keep the stock from slipping, I attach a strip of sandpaper to the front edge.

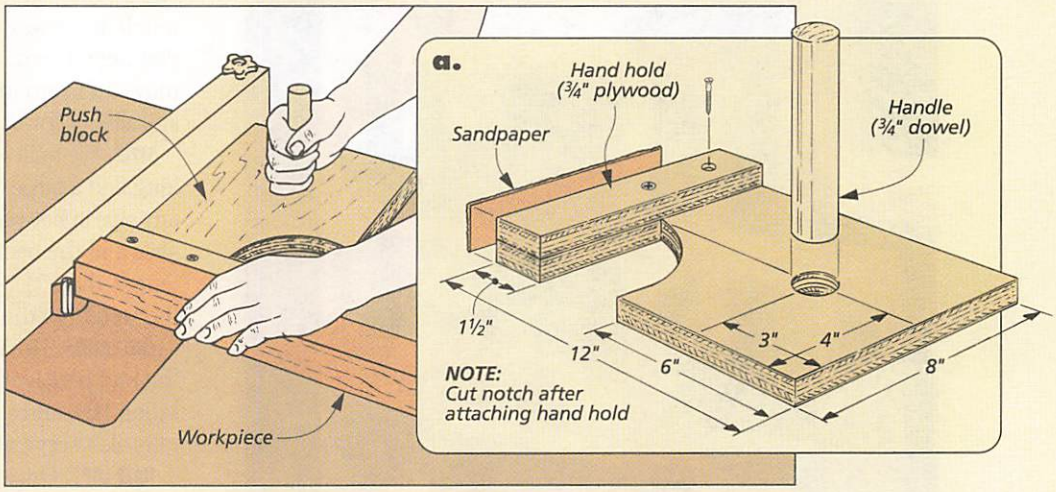

SETTING UP WITH A COMBINATION SQUARE

When it comes time to set up the router bit and add a stop block to the fence, I've found that a combination square often comes in handy.

I start by setting the height of the bit. The combination square works best here because it sits flat against the top of the router table, see Fig. 1. Simply flush the edge of the ruler to the bottom edge of the handle. Then set the ruler next to the bit.

If I'm making a stopped cut, I also use a combination square to set the stop block, see Fig. 2. Set the ruler to the length needed. Now, place the flat edge of the square's handle against the bit. The trick here is to make sure the handle is resting against the tip of the cutting edge on the bit.

Clamp the stop block to the fence at the end of the ruler. Then make a test cut to check the setup.

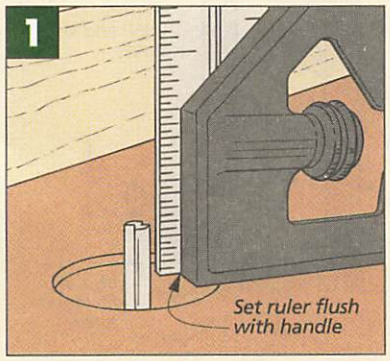

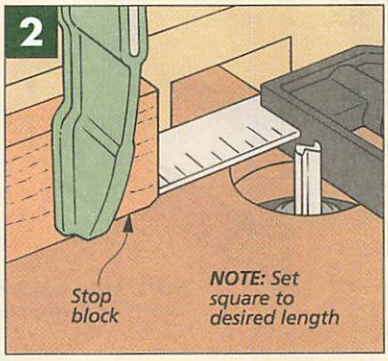

O-RING STOP

When changing bits, one thing you want to avoid is inserting the bit too far into the collet — the radius (fillet) at the point where the cutting head meets the shank may prevent the collet from gripping the shank tightly.

But it's hard to hold the bit and tighten the collet at the same time. So I slip a common rubber O-ring around the shank of the bit, see above. It holds the bit at the correct height.

STACKING STORAGE RACKS

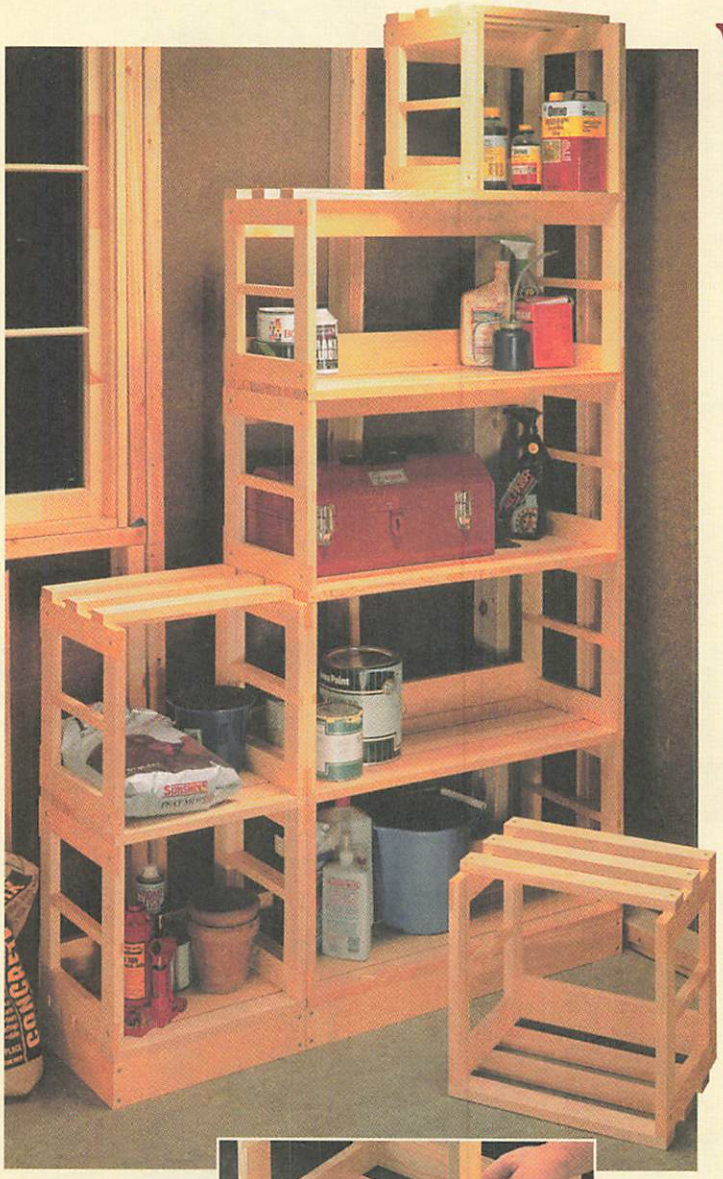

When I first saw the design for these storage racks sent in by **Arnold Baker** of Independence, Missouri, they reminded me of the old wooden packing crates farmers used for shipping fruits and vegetables.

But as I looked closer, I was intrigued by the way these "crates" stack together. The slats on the top of one crate interlock with the slats on the bottom of the crate above.

Aside from this neat stacking feature, the crates have other advantages. They're simple to build and don't require much in the way of materials. You can add more units as you need them. And the modular design allows you to move them around easily. This makes them great for shop storage, or for use in a college dorm room.

SIZES. We built two sizes of crates — a small crate 15½" long and a larger one 31" long. You can make the crates any size in between by simply changing the length of the slats and the back pieces. Note: The crates can be made longer than 31", but be sure to take into consideration the weight of the items you wish to store.

END PANELS. The first step in building the crates is to make the end panels. Each one consists of two **rails (A)**, two **stiles (B)**, and a **cross rail (C)**, see drawing. The cross rails also serve as handles to lift the crates.

HALF LAPS. Once all the pieces are cut to size, you can begin on the joinery. The end panels are assembled with half lap joints. To make these, I cut rabbets on the ends of all the rails, stiles, and cross rails using a dado blade and an auxiliary fence on my miter gauge, see Fig. 1. And to ensure all the rabbets were the same length, I used the table saw rip fence as a stop, see Fig. 1a.

With the half laps cut, the rails and stiles can be glued up. In order for the crates to stack properly, the end panels need to perfectly square. To make things easier, I built a simple assembly jig, see box on next page. The jig holds each panel square while a shank hole is drilled and a wood-

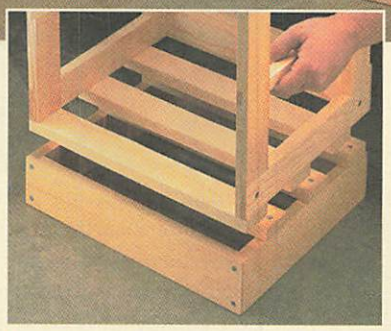

▲ *The interlocking design of these crates allows you to stack them in different configurations and move them around easily.*

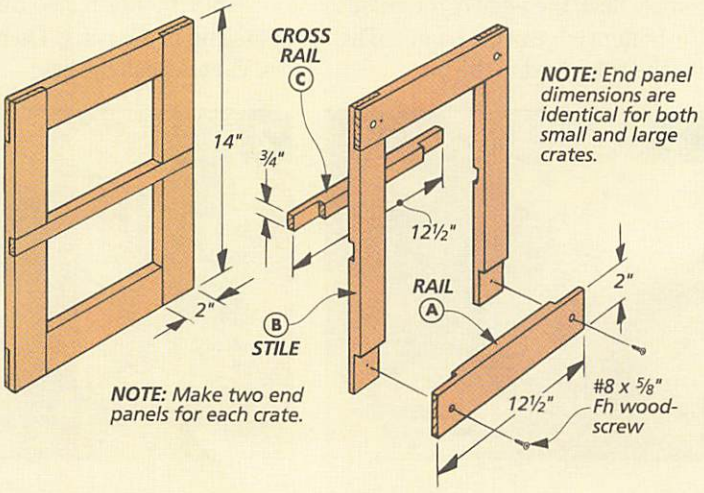

screw is inserted into each corner.

Once the glue is dry, centered dadoes can be cut on the stiles for the cross rails, see Fig. 2. These dadoes are sized to fit the half laps on the ends of the cross rails, see Fig. 2a. Then the cross rails are glued in place.

BACK. The end panels are connected by two identical back pieces. These **backs (D)** are just a couple of 3"-wide pieces of ¾"-thick stock. Then the ends of each piece are rabbeted to fit around the end panels, see Fig. 3. (Note: For large crate dimensions, see Fig. 3b.)

Woodscrews are used to attach the back pieces to the end panels. But I didn't want to drive the screws into the joint line of the half laps, so I positioned the screwholes ½" from the ends, see Fig. 3a.

SLATS. To complete the crate, all that's left is to add the **slats (E)**, see Fig. 4. These are nothing more than 2"-wide pieces of wood that are fastened to the end panels.

The slats are attached with woodscrews (again, positioning the screws ½" from the ends). But in order for the boxes to stack properly, you need to pay careful attention to how the slats are spaced on the crates, see Fig 4a.

On the top of each crate, the front slat is set back 2" from the front of the end panels. Then the second and third slats are spaced 2¼" apart.

On the bottom of the crates, the front slat is set flush with the end panels. Then the second and third slats are attached, again spaced 2¼" apart.

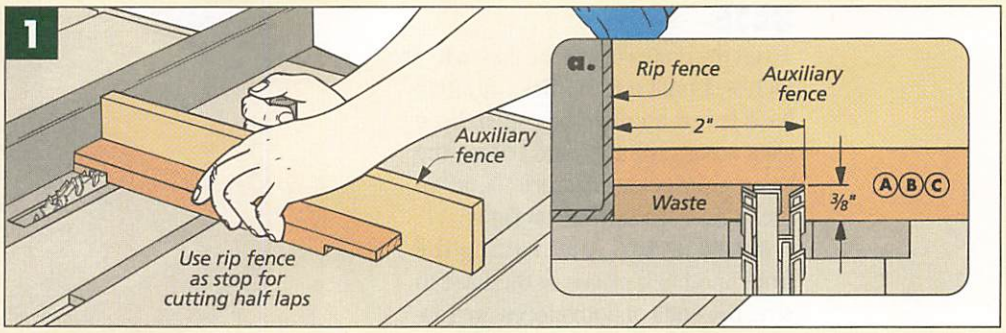

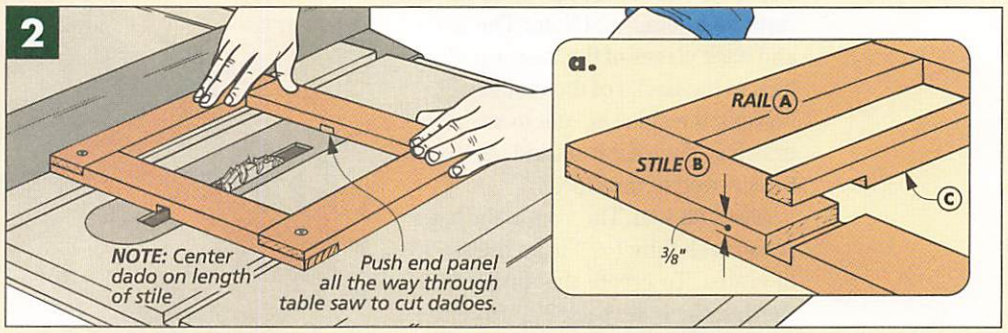

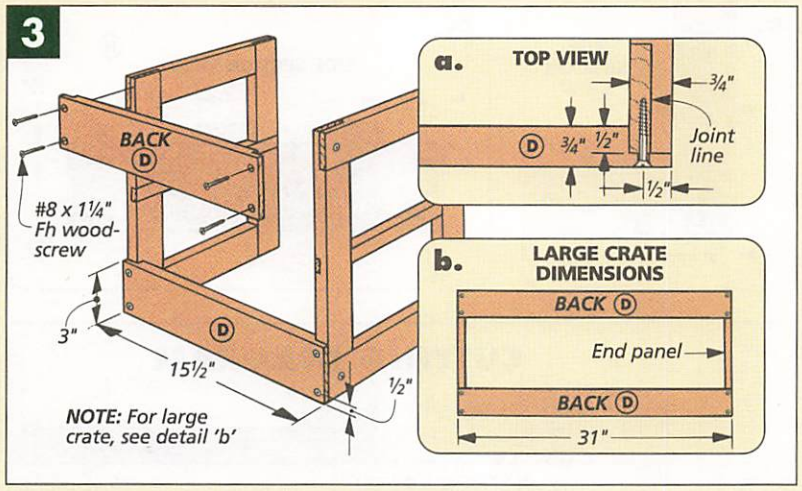

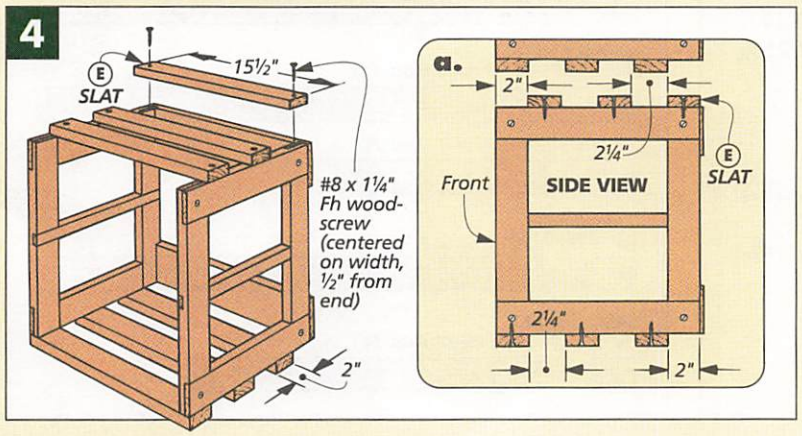

ASSEMBLY JIG

To help keep the end panels square while gluing them up, I made a simple assembly jig.

It's just four cleats screwed to a base. (I used a square to position the cleats.) The cleats hold the panel square.

I inserted a screw in each corner while the panel was still in the jig, see photo. This way, the panel can be removed immediately without waiting for the glue to dry.

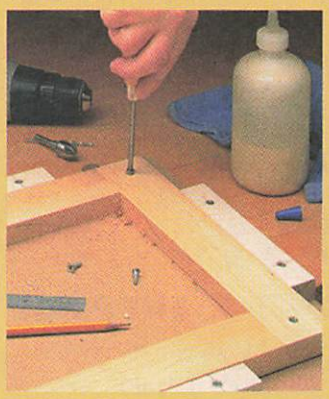

BASE

To lift the crates up off the floor a few inches, I built a base. Basically, this base is just an open box with three slats across the top. And it uses the same interlocking feature found on the crates, see drawing at right.

MAKING THE BOX. After cutting the front and back pieces of the base to size, the ends of both pieces are rabbeted for the sides, see drawing at right and detail 'a'. (Note: The front and back pieces of the base are identical to the backs of the crates.)

Next, the sides are cut to size, see drawing. Then the front and back can be screwed to the sides.

ADDING THE SLATS. The front of the base projects slightly (1/4") from the stack of crates. To create this projection, the first slat is set back 2 1/4" from the front of the base. Then the other two slats are spaced 2 1/4" apart from one another, see detail 'b' at right. W

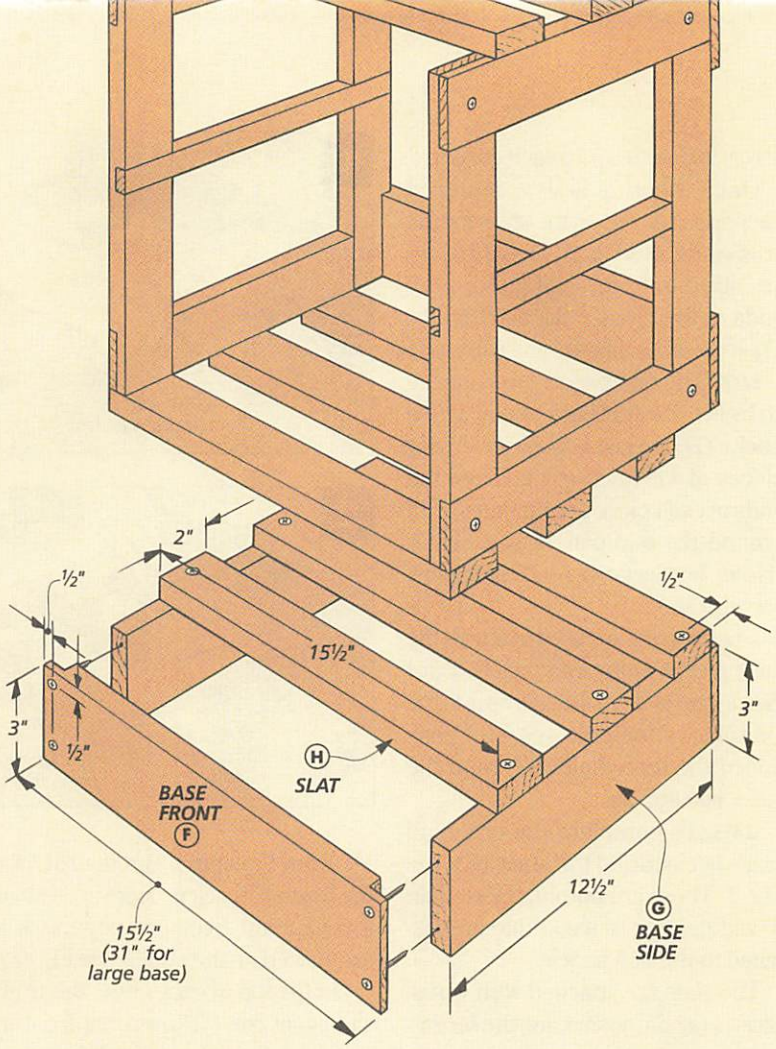

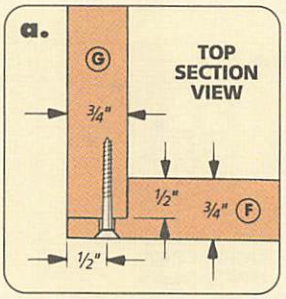

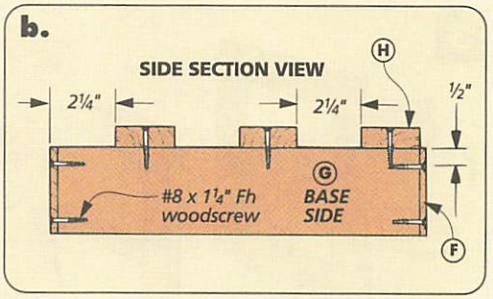

SHOP STORAGE CONTEST

Do you have an original idea for shop storage? A great way to store tools, lumber, or shop supplies? If so, we'd like to hear about it.

We'll publish the best shop storage ideas in a future issue of *Woodsmith*. Winners will receive $150. Duplicate or similar entries will be considered in the order we receive them. Send your ideas (postmarked no later than May 15, 1997) to *Woodsmith*, Shop Storage Contest, 2200 Grand Ave., Des Moines, IA 50312.

MATERIALS

LARGE/SMALL RACK

A	Rails (4)	3/4 x 2 - 12 1/2
B	Stiles (4)	3/4 x 2 - 14
C	Cross Rails (2)	3/4 x 3/4 - 12 1/2
D	Backs (2)	3/4 x 3 - (31 or 15 1/2)
E	Slats (6)	3/4 x 2 - (31 or 15 1/2)

Note: Materials shown are for one rack.

LARGE/SMALL BASE

F	Front/Back (2)	3/4 x 3 - (31 or 15 1/2)
G	Sides (2)	3/4 x 3 - 12 1/2
H	Slats (3)	3/4 x 2 - (31 or 15 1/2)

SUPPLIES

- #8 x 5/8" Fh woodscrews
- #8 x 1 1/4" Fh woodscrews

CUTTING DIAGRAM

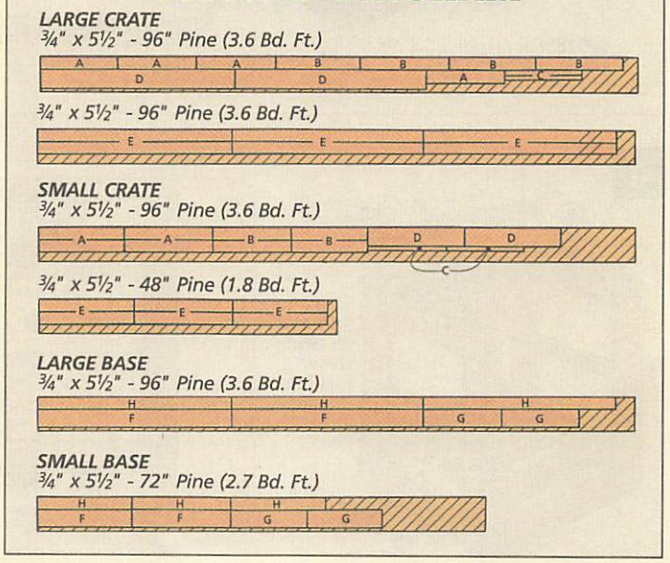

SOURCES

Woodsmith Project Supplies offers hardware kits and supplies for some of the projects shown in this issue. Supplies for these projects are also available at your local hardware store or through the mail order sources at right.

THIN STOCK

To build the finger joint boxes in this issue, you don't need any hardware. But you will need some 1/4"-thick stock.

Since 1/4"-thick stock is not always readily available, we've teamed up with Weyerhaeuser to offer 1/4"-thick stock, priced by the board, see box below.

The wood here is Weyerhaeuser's ChoiceWood. This stock has been surfaced flat and square on four sides (S4S). And it's guaranteed to be completely defect free on all faces so there are no knots, splits, or cracks.

Note: Thin stock is also available from the mail order sources at right.

MAIL ORGANIZER

To build the mail organizer on page 10, you'll also need some thin stock (1/4" and 3/8"-thick), see sources at right. Plus, you'll need a few screws and some 3/4"-dia. felt pads, available at the sources at right and local hardware stores.

END TABLE

There's not much hardware to the end table on page 20. But here's a list of the items you'll need:

(1) 1 1/8"-dia. Wood Knob with #8 x 1 1/4" Screw
(4) Figure-8 Table Top Fasteners
(8) #8 x 5/8" Fh Woodscrews
(1) Flush Mount Panel Retainer w/Screw

These or similar items can be found at local hardware stores or the mail order sources at right.

Note: The panel retainer we used for a drawer catch was for flush mount panels. But retainers for recessed panels may work as well.

BOOKS

If you like the projects in *Woodsmith*, then you'll be interested in two books we've recently put together.

Bookcases & Shelves is the first in our collection. It features twelve of the best bookcase and shelf projects ever published in *Woodsmith*. You'll find everything from simple shelves to a Craftsman-style bookcase with challenging through-tenon joinery.

The second book, *Classic Cabinets*, includes ten of our

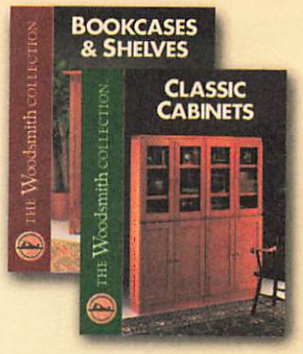

favorite cabinet projects. These include a small collector's cabinet, a traditional armoire, a country pie safe, as well as other projects.

Both books feature full-color drawings, step-by-step techniques, and a handy, lay-flat binding.

Currently, *Bookcases & Shelves* and *Classic Cabinets* can be ordered at a special introductory price. And you have the option of ordering them either through *Woodsmith Project Supplies* or through our web site, see the boxes below.

2005-200 *Classic Cabinets* Book $17.95
2005-100 *Bookcases & Shelves* Book $17.95
Buy Both & Save
2005-150 ..... $34.95

MAIL ORDER SOURCES

Similar project supplies and hardware may be ordered from the following companies:

Lee Valley
800-871-8158
1/4" & 3/8"-thick stock, Felt pads

Woodcraft
800-225-1153
Cherry knob
1/4" & 3/8"-thick stock

Woodsmith Store
800-835-5084
End table hardware, Cherry knob, Felt pads

Woodworker's Hardware
800-383-0130
End table hardware

Woodworkers' Store
800-279-4441
End table hardware, Cherry knob
1/4" & 3/8"-thick stock, Felt pads

Woodworker's Supply
800-645-9292
End table hardware, Felt pads

Weyerhaeuser ChoiceWood™

Species	Part #	Size	Price
Oak	3013	1/4" x 2 1/2" - 3'	$2.95
		1/4" x 5 1/2" - 3'	$6.95
		1/4" x 5 1/2" - 4'	$8.95
Cherry	3011	1/4" x 2 1/2" - 3'	$5.95
		1/4" x 5 1/2" - 3'	$12.95
Walnut	3019	1/4" x 2 1/2" - 3'	$6.95
		1/4" x 5 1/2" - 3'	$15.95

WOODSMITH PROJECT SUPPLIES

If you would like to order project supplies or books from *Woodsmith Project Supplies*, please use our Toll Free order line, see below. It's open Monday through Friday, from 7 AM to 7 PM Central Time.

Before calling, please have your VISA, MasterCard, or Discover Card ready.

If you would like to mail your order in, call the number below for more information concerning shipping charges as well as any applicable sales tax.

1-800-444-7527

Note: Prices subject to change after June 1997

WoodNet™ NOW ON THE WEB!

- 50 Woodworking Tips Online
- Project Plans You Can Download
- WoodNet Forum — Woodworkers' Q & A
- Home Improvement Forum
- Power Tool Reviews
- Links to Other Woodworking Sites
- Online Back Issue Database

Point your browser to:

http://www.augusthome.com

Select "Woodworking" from the Welcome Page menu.

FINAL DETAILS

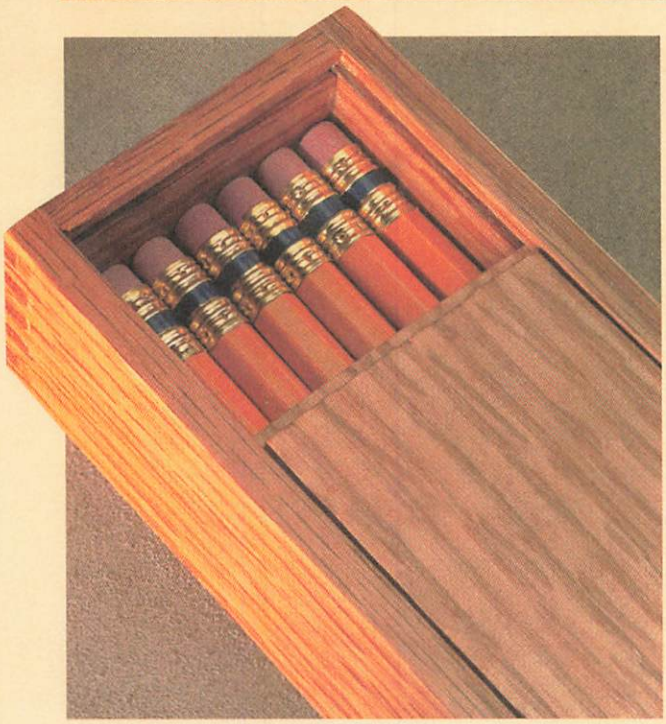

◄ ***Finger Joint Boxes.***
Finger joints are a quick way to turn out attractive boxes of all shapes and sizes. And we've included plans for a few different box designs, starting on page 6.

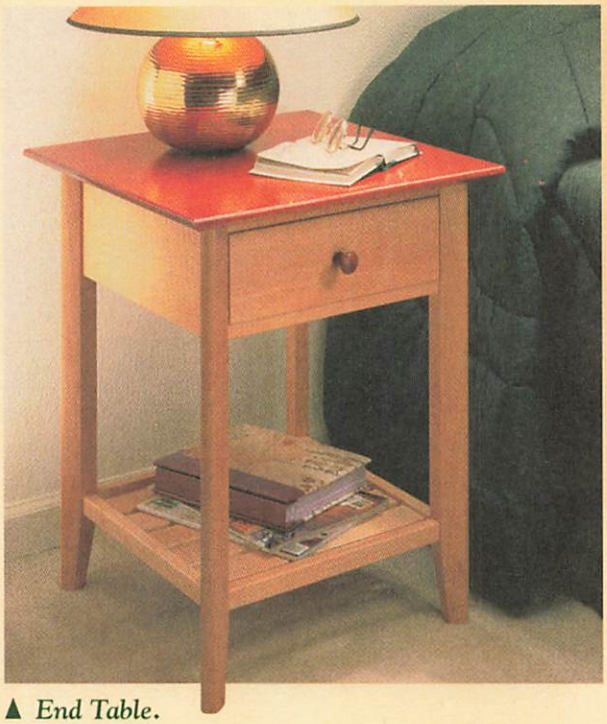

▲ ***End Table.***
This project features unique diamond-shaped legs, a drawer, and a storage shelf, making it an ideal end table or bedside nightstand, see page 20.

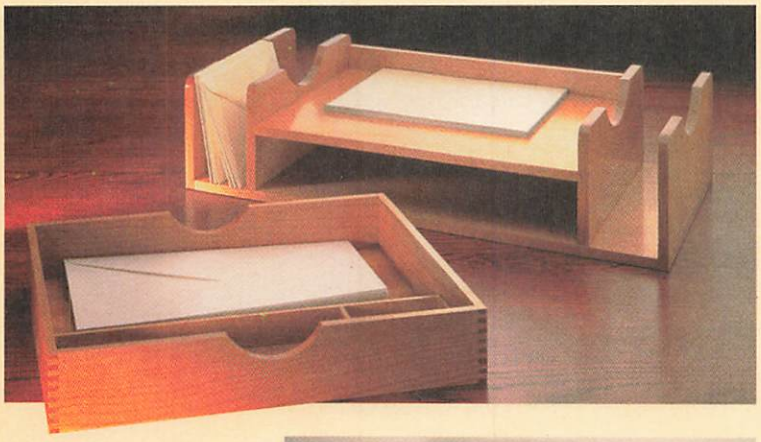

▲ ***Mail Organizer.***
A finger joint drawer makes a handy place to store supplies in this easy-to-build mail organizer. Complete plans begin on page 10.

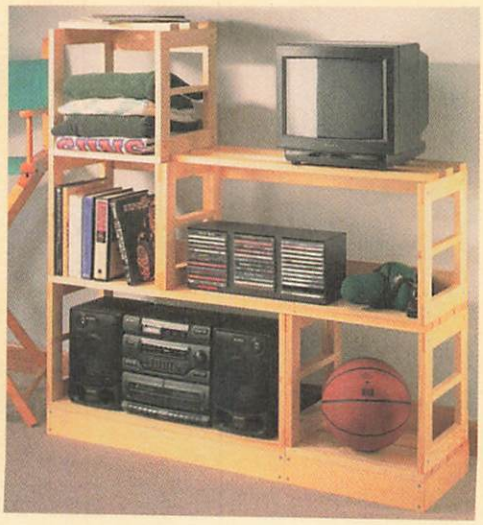

Stacking Storage Racks. ►
The versatile design of these racks make them a great addition to a shop — or dorm room. See page 32 for plans.